DESIGNED BY	SRT
CHECKED BY	KLK
DRAFTED BY	JHK
SCALE	N/A
DATE	8/7/2026
TIME	8:15 AM

DRAWING LOCATION
C:\DOWL_PW\D0433398\00799_A1-A2.DWG

STATE OF ALASKA

DEPARTMENT OF TRANSPORTATION AND PUBLIC FACILITIES

NO.	DATE	REVISION

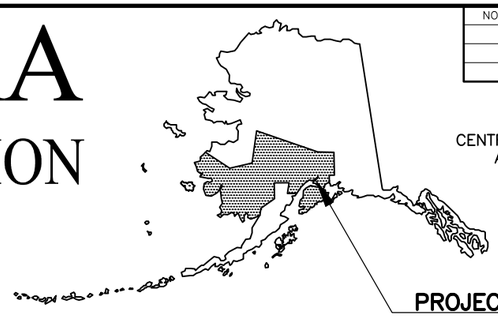

STATE	PROJECT DESIGNATION		YEAR	SHEET NO.	TOTAL SHEETS
ALASKA	0001729/CFHWY00799		2027	A1	A9
ROUTE ID	2381057X000	MILEPOINT	0.05 - 0.85		
LATITUDE	61.57855	LONGITUDE	-149.390208		

PROPOSED HIGHWAY PROJECT

HERMON RD EXTENSION AND UPGRADE: PARKS HWY TO PALMER-WASILLA HWY PROJECT NO. 0001729/CFHWY00799

GRADING, DRAINAGE, PAVING, PATHWAYS, ILLUMINATION, SIGNALIZATION, SIGNING, AND STRIPING

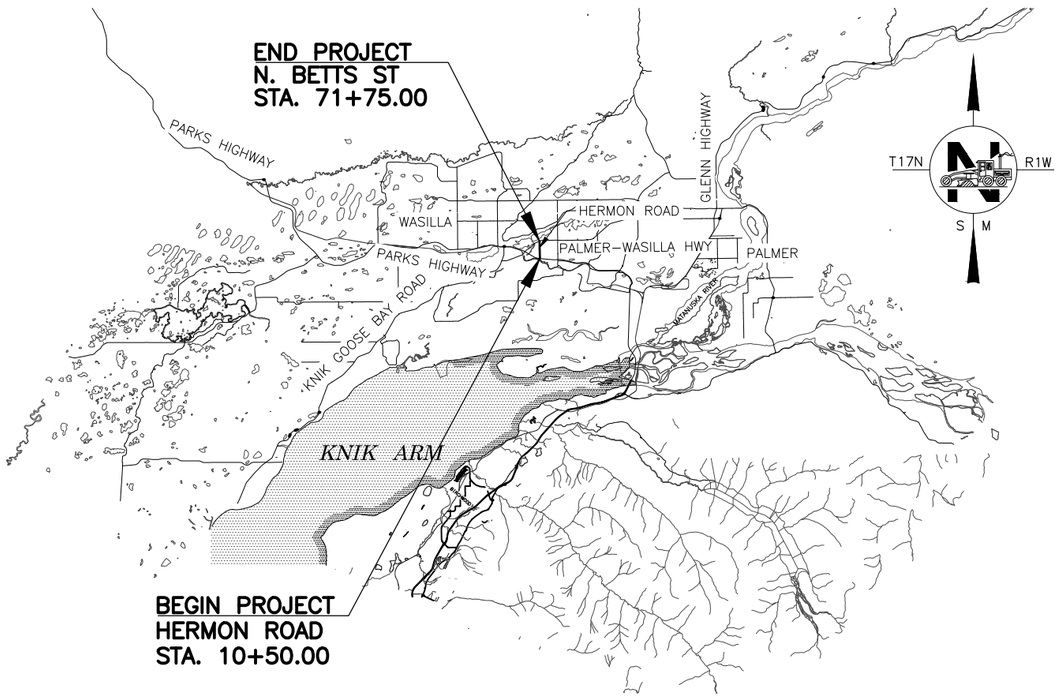

PROJECT SUMMARY		
ROADWAY	WIDTH	LENGTH
	FEET	MILES
HERMON ROAD MP 0.05-0.85 ("HR")	32-44	0.80
MOUNTAIN VILLAGE DR. ACCESS ("MV")	23	0.02
E. QUIET CIRCLE ("QC")	20	0.02
E. TYSONS TRAIL ("TT")	25	0.02
S. MANEY DRIVE ("SM")	22	0.02
E. WHISPERING WOODS DRIVE ("WW")	22	0.01
E. ZAK CIRCLE ("ZC")	18	0.02
S. ADELE CIRCLE ("AC")	24	0.04
E. PALMER-WASILLA HWY ("PW")	48	0.08
N. BETTS STREET ("BS")	15-36	0.03

DESIGN DESIGNATIONS	
	HERMON ROAD
FUNCTIONAL CLASS	URBAN MINOR ARTERIAL
AADT (2022)	2000
AADT (2046)	3217
DESIGN SPEED (V)	40 MPH
DHV (2022)	10%
DHV (2046)	10%
T-PERCENT COMMERCIAL TRUCKS (%)	5.79
D-DIRECTIONAL DISTRIBUTION (%)	60/40

PS&E REVIEW
AUGUST 2026

PLANS DEVELOPED BY: DOWL, LLC

STATE OF ALASKA
DEPARTMENT OF TRANSPORTATION & PUBLIC FACILITIES
4111 AVIATION AVENUE, ANCHORAGE, AK 99502
(907)269-0590

APPROVED:

REGIONAL PRECONSTRUCTION ENGINEER DATE

CONCUR:

REGIONAL CONSTRUCTION ENGINEER DATE

NO.	DATE	REVISION

STATE	PROJECT DESIGNATION	YEAR	SHEET NO.	TOTAL SHEETS
ALASKA	0001729/CFHWY00799	2027	A2	A9

DESIGNED BY SRT
CHECKED BY KLK
DRAFTED BY JHK

SCALE N/A

DATE TIME 8/7/2026 11:07 AM

DRAWING LOCATION C:\DOWL_PW\0043398\00799_A1-A2.DWG

ABBREVIATIONS:

@	AT
&	AND
ADT	AVERAGE DAILY TRAFFIC
AFB	ACTUATED FLASHING BEACON
APPROX	APPROXIMATE
ASP	ALASKA STANDARD PLAN
BM	BENCH MARK
BP	BEGINNING OF PROJECT
A.V.C.E.	BEGIN VERTICAL CURVE ELEVATION
A.V.C.S.	BEGIN VERTICAL CURVE STATION
CAP	CONCRETE ASPHALT PIPE
CB	CATCH BASIN
CC	CENTER TO CENTER
C&G	CURB AND GUTTER
CIR	CIRCLE
℄	CENTERLINE
CONC	CONCRETE
CONT	CONTINUOUS, CONTINUATION
CPP	CORRUGATED POLYETHYLENE PIPE, TYPE S
CSP	CORRUGATED STEEL PIPE
CTE	CONNECT TO EXISTING
CY	CUBIC YARD
DET	DETAIL
DHV	DESIGN HOURLY VOLUME
DI	DUCTILE IRON
DIA	DIAMETER
DR	DRIVE
DOT&PF	DEPARTMENT OF TRANSPORTATION AND PUBLIC FACILITIES
DT	DETECTABLE WARNING TILE
E	EAST, EASTING
EG	EXISTING GRADE
EL, ELEV.	ELEVATION
EP	END OF PROJECT
EOP	EDGE OF PAVEMENT
EOTW	EDGE OF TRAVELED WAY
ESCP	EROSION SEDIMENT CONTROL PLAN
ESMT	EASEMENT
FES	FLARED END SECTION
FG	FINAL GRADE
FI	FIELD INLET
FL	FLOW LINE (ELEV)
FT. '	FOOT, FEET
FTG	FOOTING
GAL	GALLONS
GB	GRADE BREAK
H	HORIZONTAL
HDPE	HIGH-DENSITY POLYETHYLENE
HMA	HOT MIX ASPHALT
HWY	HIGHWAY
IN, "	INCH, INCHES
INV	INVERT
J, JB	JUNCTION BOX
JT	JOINT
LB	POUNDS
LF	LINEAR FEET
LT, (L)	LEFT
L.V.C.	LENGTH OF VERTICAL CURVE
MAX	MAXIMUM
MB	MAILBOX
ME	MATCH EXISTING
MH1	STORM DRAIN MANHOLE, TYPE 1
MH2	STORM DRAIN MANHOLE, TYPE 2
MIN	MINIMUM
MISC	MISCELLANEOUS
ML	MANHOLE LID
MUTCD	MANUAL ON UNIFORM TRAFFIC CONTROL DEVICES
N	NORTH, NORTHING
NFS	NON-FROST SUSCEPTIBLE
NO., #	NUMBER
NTS, N.T.S.	NOT TO SCALE
O.C./OC	ON CENTER
OD	OUTSIDE DIAMETER
PED	PEDESTRIAN
P.I.	POINT OF INTERSECTION
PC, POC	POINT OF CURVATURE
PT, POT	POINT OF TANGENCY
PRC	POINT OF REVERSE CURVE
PROP	PROPOSED
PVI	POINT OF VERTICAL INTERSECTION
PVMT	PAVEMENT
R, RAD	RADIUS
RD	ROAD
REQD	REQUIRED
RP	RADIUS POINT
ROW, R/W	RIGHT-OF-WAY
RT, (RT)	RIGHT
S	SOUTH
SDMH	STORM DRAIN MANHOLE
SHT	SHEET
SHTS	SHEETS
SHLD	SHOULDER
SPECS	SPECIFICATIONS
SSHC	STANDARD SPECIFICATIONS FOR HIGHWAY CONSTRUCTION
ST	STREET
STA.	STATION
STD	STANDARD
SW	SIDEWALK
TBC	TOP BACK OF CURB
TCE	TEMPORARY CONSTRUCTION EASEMENT
TCP	TEMPORARY CONSTRUCTION PERMIT
TRL	TRAIL
TW	TOP OF WALL
TWLT	TWO WAY LEFT TURN
TYP	TYPICAL
UTIL.	UTILITY
VB	VALVE BOX
VBS	VEGETATED BUFFER STRIP
V.C.	VERTICAL CURVE
VG	VALLEY GUTTER
V.P.I.	VERTICAL POINT OF INTERSECTION
W	WEST

GENERAL NOTES:

1. ALL CONSTRUCTION SHALL BE CONTAINED WITHIN THE RIGHT-OF-WAY, TEMPORARY CONSTRUCTION EASEMENTS, AND TEMPORARY CONSTRUCTION PERMITS. NO EXCESS MATERIAL SHALL BE DISPOSED OF WITHIN THE RIGHT-OF-WAY, UNLESS SPECIFICALLY CALLED FOR IN THE PLANS OR DIRECTED BY THE ENGINEER.

2. ALL PAVEMENT CUTS SHALL BE MADE WITH A SAW OR ALTERNATE METHOD APPROVED BY THE ENGINEER.

3. CLEARING LIMITS SHALL BE 5 FEET BEYOND SLOPE CATCH POINTS OR 5 FEET INSIDE THE RIGHT-OF-WAY LINE, WHICHEVER IS LESS.

4. PLACE 4 INCHES TOPSOIL AND SEED ON ANY AREAS DISTURBED BY CONSTRUCTION AND AS DIRECTED BY THE ENGINEER.

5. THE EXISTING INFORMATION SHOWN IN THE PLANS IS FROM AS-BUILTS AND HAS BEEN PARTIALLY FIELD VERIFIED. FIELD CONDITIONS MAY NOT BE ACCURATELY REPRESENTED AND/OR MAY HAVE CHANGED. ADJUST INSTALLATIONS AS DIRECTED BY THE ENGINEER.

6. ADJUST ALL PAVEMENT PENETRATIONS TO FINAL GRADE PRIOR TO TOP LIFT OF PAVING.

   IF ANY PAVEMENT PENETRATION REQUIRES GRADE ADJUSTMENT AFTER FINAL LIFT PAVING, AS DETERMINED BY THE ENGINEER, SAW CUT A NEAT LINE ALONG THE PAVEMENT TO BE REMOVED. USE AN INFRARED HEATER TO HEAT THE EXISTING PAVEMENT; EQUIPMENT AND MAXIMUM TEMPERATURE SHALL BE APPROVED BY THE ENGINEER. REPLACE THE REMOVED ASPHALT WITH NEW HOT MIX ASPHALT AND THOROUGHLY COMPACT. SEAL JOINTS, AT LEAST 12 INCHES WIDE CENTERED ON JOINT, USING ASPHALT SYSTEMS GSB-88, OR APPROVED EQUAL, WHILE THE HOT MIX ASPHALT IS CLEAN, FREE OF MOISTURE AND PRIOR TO STRIPING.

   THERE SHALL BE NO PAYMENT FOR ADDITIONAL WORK CAUSED BY FAILURE TO ADJUST PAVEMENT PENETRATIONS TO FINAL GRADE.

7. CONSTRUCT CURB RAMPS TO AVOID IMPACTING SIGNAL POLE FOUNDATIONS. DO NOT COVER SIGNAL POLE FOUNDATION BOLTS AND BASE PLATES WITH TOPSOIL.

8. ALL TYPE "A" INLET BOXES SHALL HAVE MINIMUM 18 INCHES SUMPS.

9. PLACE CURB AND GUTTER PRIOR TO FINAL LIFT OF ASPHALT.

INDEX

SHEET NO.	DESCRIPTION
A1	TITLE SHEET
A2	INDEX, ABBREVIATIONS, AND GENERAL NOTES
A3	LEGEND
A4	SHEET LAYOUT
A5-A9	SURVEY CONTROL SHEETS
B1-B4	TYPICAL SECTIONS
C1-C2	ESTIMATE OF QUANTITIES
D1-D6	SUMMARY TABLES
E1-E8	DETAIL SHEETS
F1-F10	MAINLINE PLAN AND PROFILE
F11-F14	APPROACH PLAN AND PROFILE
FD1-FD3	DRIVEWAY PLANS AND PROFILES
G1-G9	GRADING PLANS
H1-H18	TRAFFIC DETAILS
HA1-HA6	SIGNALIZATION PLANS
HS1-HS12	SIGNING, STRIPING, ILLUMINATION & INTERCONNECT PLANS
HS13-HS17	SIGN SUMMARY
Q1	RETENTION BASIN DETAILS
R1-R11	RIGHT-OF-WAY MAPS

THE FOLLOWING CENTRAL REGION STANDARD DETAILS APPLY TO THIS PROJECT:

CR-T-01.20

IN THE EVENT OF CONFLICT, CENTRAL REGION STANDARD DETAILS SUPERSEDE ALASKA STANDARD PLANS, STANDARD MODIFICATIONS, AND STANDARD SPECIFICATIONS. PLANS AND SPECIAL PROVISIONS SUPERSEDE CENTRAL REGION STANDARD DETAILS.

THE FOLLOWING ALASKA STANDARD PLANS APPLY TO THIS PROJECT:

C-03.30, C-04.12, C-05.20, C-06.00
D-01.02, D-04.22, D-06.10, D-08.00, D-22.01, D-23.01, D-24.00, D-25.00, D-26.04, D-35.10
E-09.00
F-01.04, F-03.02
I-21.12, I-22.11
L-25.01
M-13.01, M-20.15, M-23.13, M-25.00
S-00.12, S-05.02, S-23.00, S-30.05, S-31.02, S-32.02, S-52.01
T-20.04, T-21.04, T-22.04, T-23.01, T-30.12, T-55.11, T-56.12

SPECIFICATION:

CONSTRUCT THE IMPROVEMENTS COVERED BY THESE PLANS IN ACCORDANCE WITH THE ALASKA DEPARTMENT OF TRANSPORTATION AND PUBLIC FACILITIES STANDARD SPECIFICATIONS FOR HIGHWAY CONSTRUCTION 2020 EDITION AND THE PROJECT SPECIAL PROVISIONS.

STATE OF ALASKA
PROFESSIONAL ENGINEER
PS&E REVIEW
AUGUST 2026

DOWL, LLC
5015 BUSINESS PARK BLVD
SUITE 4000
ANCHORAGE, AK 99503
(907) 562-2000
#AECL848 - AK

STATE OF ALASKA
DEPARTMENT OF TRANSPORTATION
AND PUBLIC FACILITIES

HERMON RD EXTENSION AND UPGRADE, PARKS HWY TO PALMER-WASILLA HWY

INDEX, ABBREVIATIONS, AND GENERAL NOTES

DESIGNED BY	SRT
CHECKED BY	KLK
DRAFTED BY	JHK
SCALE	N/A
DATE TIME	8/7/2026 11:07 AM

DRAWING LOCATION
C:\DOWL_PW\0043398\00799_A1-A2.DWG

ROADWAY

	EXISTING	PROPOSED
EDGE OF PAVEMENT		
LIMIT OF CUT SLOPE & FILL SLOPE		CUT / FILL
GRAVEL EDGE		
SIDEWALK AND PATH/TRAIL		
CONCRETE CURB & GUTTER		
CONCRETE CURB CUT		
PARALLEL CURB RAMP PERPENDICULAR CURB RAMP		
UNIDIRECTIONAL CURB RAMP & MID-BLOCK CURB RAMP		
DETECTABLE WARNING TILE		
GUARDRAIL		
END & PARALLEL END SECTIONS		
ROADWAY OBLITERATION		
FENCE	X X	X X
STONE FENCE		
NOISE BARRIER	====X====X	====X====X
RETAINING WALL		
HEADWALL & WINGWALL		
BOTTOM OF DITCH		
SPECIAL DITCH		
FLAT BOTTOM DITCH		
BERM		
SPECIAL FLAT BOTTOM DITCH		
RIPRAP OUTLET PROTECTION/DITCH		
BOULDER OR BOULDERS		
PRIVATE SIGN, MAILBOX	PMB	PMB
POST, BOLLARD		
ROADWAY RECONSTRUCTION LIMITS		
ROADWAY PLANING LIMITS		
GRADE BREAK LINE		GB GB

UTILITIES

	EXISTING	PROPOSED
STORM DRAIN	SD	SD
STORM DRAIN MANHOLE, CLEANOUT	SD CO	SD CO
CURB INLET CATCH BASIN FIELD INLET CATCH BASIN	FI	FI
PIPE CULVERT WITH END SECTION		
SANITARY SEWER	SS	SS
SANITARY SEWER MANHOLE, CLEANOUT	SS CO	SS CO
SEPTIC VENT, SEWER SERVICE CONNECTION	S	
WATER	W	W
FIRE HYDRANT, VALVE OR RISER		
WELL, WATER SERVICE CONNECTION	W	
NATURAL GAS	G G	
OIL OR GASOLINE PIPELINE	OIL	
TANKS (ABOVE GROUND, UNDERGROUND)	U	
ELECTRIC	OE (OVERHEAD) UE (UNDERGROUND) OE|OT (OVERHEAD)	
UTILITY POLE, POLE WITH LUMINAIRE		
GUY POLE, GUY WIRE ANCHOR	GP	
TRANSMISSION TOWER (WOOD, STEEL)		
ELECTRIC PEDESTAL, TRANSFORMER	E	E
ELECTRIC MANHOLE, METER	E	
ELECTRIC OUTLET, LANDSCAPE LIGHT		
TELEPHONE	OT (OVERHEAD) UT (UNDERGROUND) UT|UTV (UNDERGROUND)	
TELEPHONE MANHOLE, PEDESTAL	T	
FIBER OPTIC	OFO (OVERHEAD) FO (UNDERGROUND)	
FIBER OPTIC MANHOLE	FO	
CABLE TV	OTV (OVERHEAD) UTV (UNDERGROUND)	
CABLE TV PEDESTAL, SATELLITE DISH		
UNDERGROUND DUCT, UTILIDOR (ELECTRIC, TELEPHONE, FIBER OPTIC)		
VENT		

TOPOGRAPHY

	EXISTING		EXISTING	PROPOSED
LAKE OR POND, WETLANDS	LAKE/POND	CONTOUR, MAJOR OR MINOR	520	520
TREE (CONIFER/DECIDUOUS) TREELINE (EDGE OF VEGETATION)		DRAINAGE FLOW		
PLANTER	P	CREEK (CENTERLINE)		
BUILDING OR FOUNDATION		RIVER (EDGE OF WATER)		

TRAFFIC

	EXISTING	PROPOSED
LOAD CENTER		
STATE TRAFFIC, MOA TRAFFIC, & BEACON CONTROLLER ARROW INDICATES DOOR LOCATION		
TYPE 1A, II, III, IV JUNCTION BOX		##
FIBER OPTIC VAULT	F/O	F/O ##
ELECTROLIER		
HIGHTOWER		HT#
SIGNAL POLE WITH MASTARM		14
PEDESTRIAN PUSH BUTTON & SIGNAL		
VEHICULAR SIGNAL		
VEHICULAR SIGNAL LEFT & RIGHT		
OPTICAL, CAMERA, RADAR, AND GPS DETECTOR		CAM A RAD GPS
LOOP DETECTOR		###
COMMUNICATION ANTENNA		
MASTARM BEACON		
RURAL & SCHOOL ZONE BEACON		
LOOP DETECTOR CONDUIT		
SIGNAL CONDUIT	TR	TR
LIGHTING CONDUIT	LTG	LTG
SIGNAL & LIGHTING CONDUIT	T/L	T/L
CONDUIT BORING		
CONDUIT SIZE IN INCHES	2" 3C4	2" 1-3C4 CKT BA12 CKT BA13
INTERCONNECT	I/C	I/C
SIGN POST		##

PAVEMENT MARKINGS

	PROPOSED
TRAFFIC PROJECT CENTERLINE	
8" & 4" WHITE SOLID STRIPE	8"W 4"W
4" WHITE SKIP STRIPE 10' STRIPES AND 30' SPACES	4"W SKIP
8" WHITE LANE GUIDE SKIP LANE CONTINUATION OR TURN SKIP 1' STRIPES AND 3' SPACES	8"W GUIDE SKIP
8" & 4" YELLOW SOLID STRIPE	8"Y 4"Y
4" YELLOW SKIP STRIPE 10' STRIPES AND 30' SPACES	4"Y SKIP
STRIPING CHANGE STATION INTERVAL	+20
2' STOPBAR	24"W (TYP)
2' CROSSWALK LAYOUT	10'
TYPICAL PAINTED MEDIAN	12' (2)-4"Y 3" APART; VARIES; 18"Y @ 45°

NO.	DATE	REVISION

STATE	PROJECT DESIGNATION	YEAR	SHEET NO.	TOTAL SHEETS
ALASKA	0001729/CFHWY00799	2027	A3	A9

RIGHT-OF-WAY

	RECOVERED	SET THIS PROJECT
FEDERAL GOV'T SURVEY MONUMENT		
GOV'T CONTROL STATION		
PRIMARY MONUMENT (BRASS/AL CAP)		
MISC SECONDARY CORNER		
PRIMARY CENTERLINE MONUMENT		
SECONDARY CENTERLINE MONUMENT		
RANDOM CONTROL MONUMENT	RCM	
PRIMARY GPS CONTROL POINT	GPS	
HORIZONTAL CONTROL POINT	CP	
SECONDARY CONTROL POINT	SCP	
VERTICAL BENCHMARK	BM	
TEMPORARY BENCHMARK	TBM	
TOWNSHIP AND RANGE LINES		T13N / T12N; R2W / R3W
SECTION LINE		
1/4 SECTION LINE		
1/16 SECTION LINE		
CORPORATE or CITY LIMITS		
EXISTING RIGHT-OF-WAY		
RIGHT-OF-WAY OR EASEMENT REQUIRED		
PROJECT RIGHT-OF-WAY LINE		
EXISTING RIGHT-OF-WAY EASEMENT		
EXISTING PROPERTY LINE		
CONTROLLED ACCESS LINE		
EXISTING UTILITY EASEMENT		
PROPOSED UTILITY EASEMENT		
EXISTING CENTERLINE		
RAILROAD CENTERLINE		
TEMPORARY CONSTRUCTION EASEMENT		
TEMPORARY CONSTRUCTION PERMIT		
PROPOSED RIGHT-OF-WAY LINES		PROP ROW

STATE OF ALASKA
PS&E REVIEW
AUGUST 2026
PROFESSIONAL ENGINEER

DOWL, LLC
5015 BUSINESS PARK BLVD
SUITE 4000
ANCHORAGE, AK 99503
(907) 562-2000
#AECL848 – AK

STATE OF ALASKA
DEPARTMENT OF TRANSPORTATION
AND PUBLIC FACILITIES

HERMON RD EXTENSION AND UPGRADE, PARKS HWY TO PALMER-WASILLA HWY

LEGEND

NO.	DATE	REVISION

STATE	PROJECT DESIGNATION	YEAR	SHEET NO.	TOTAL SHEETS
ALASKA	0001729/CFHWY00799	2027	A4	A9

DESIGNED BY SRT
CHECKED BY KLK
DRAFTED BY JHK

SCALE 1"=100'

DATE 8/7/2026 TIME 11:07 AM

DRAWING LOCATION
C:\DOWL_PW\0043398\00799_A4.DWG

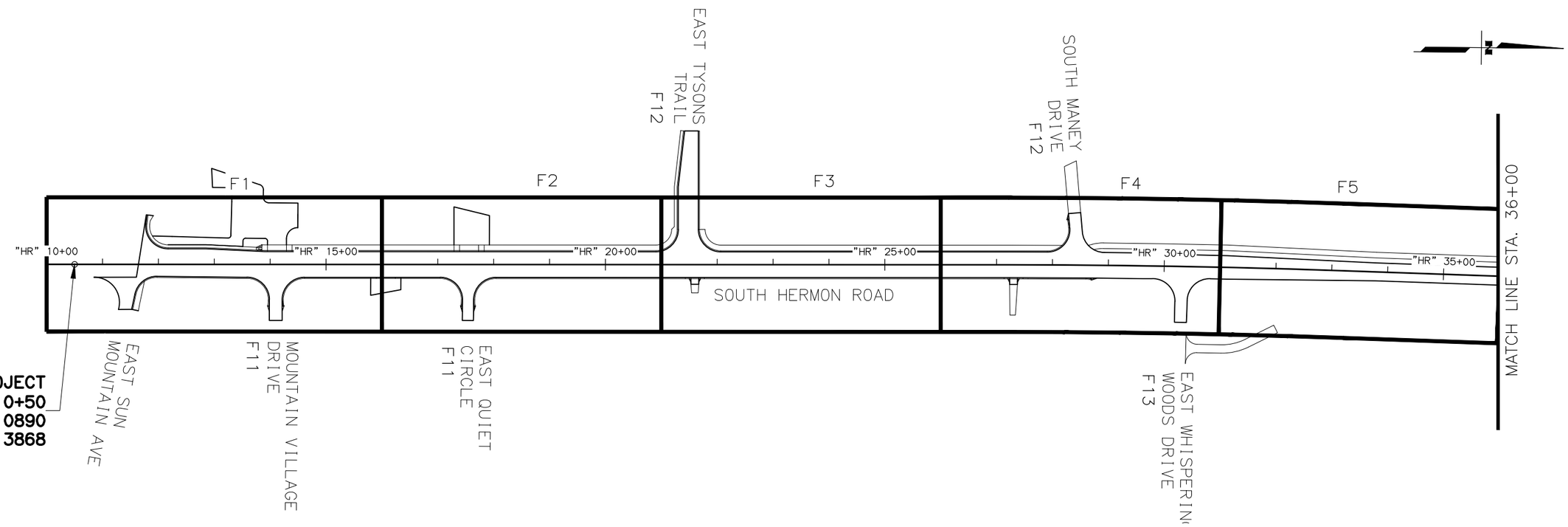

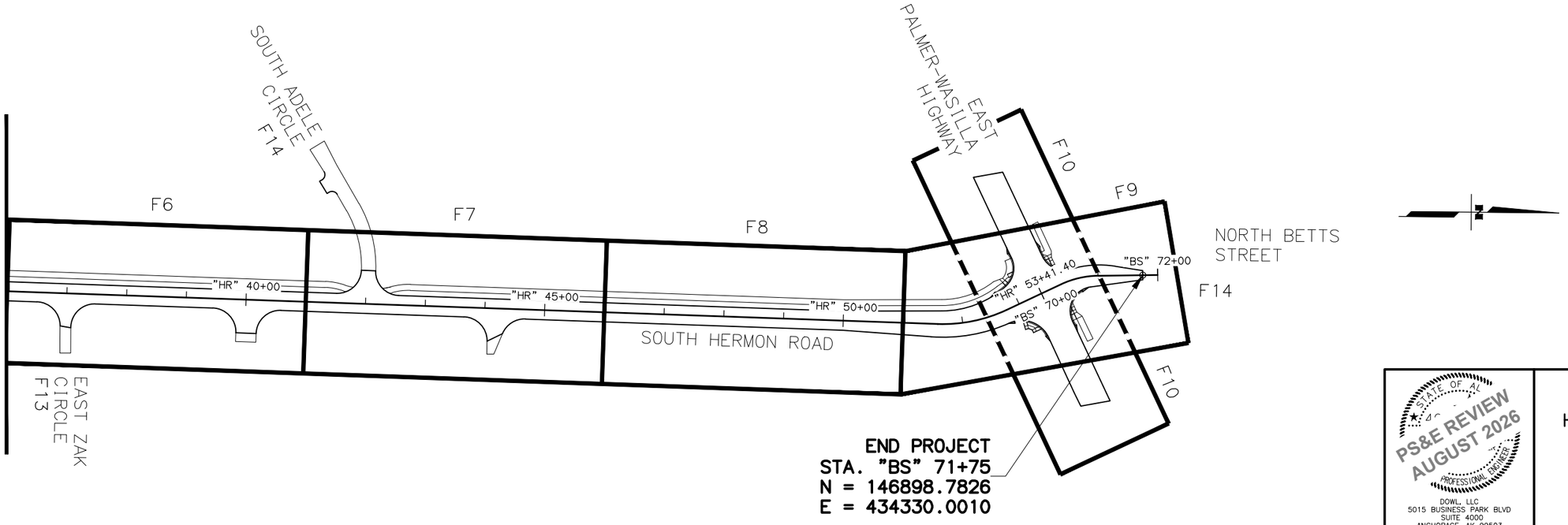

PS&E REVIEW AUGUST 2026

DOWL, LLC
5015 BUSINESS PARK BLVD
SUITE 4000
ANCHORAGE, AK 99503
(907) 562-2000
#AECL848 - AK

STATE OF ALASKA
DEPARTMENT OF TRANSPORTATION
AND PUBLIC FACILITIES

HERMON RD EXTENSION AND UPGRADE, PARKS HWY TO PALMER-WASILLA HWY

SHEET LAYOUT

NO.	DATE	REVISION

STATE	PROJECT DESIGNATION	YEAR	SHEET NO.	TOTAL SHEETS
ALASKA	0001729/CFHWY00799	2027	A5	A9

DESIGNED BY AH
CHECKED BY JV
DRAFTED BY MH

SCALE

DATE TIME
2/25/2026 3:55 PM

DRAWING LOCATION
T:\2022\22-009 HERMON ROAD EXTENSION\SURVEY\4_DWG\HERMON_RD_SCS.DWG

HORIZONTAL CONTROL STATEMENT

COORDINATE SYSTEM:
THIS PROJECT IS LOCATED ENTIRELY WITHIN THE MATANUSKA–SUSITNA VALLEY SV–1 ADJUSTMENT, A U.S. FOOT LOCAL SURFACE GRID COORDINATE SYSTEM DEVELOPED BY THE ALASKA DEPARTMENT OF TRANSPORTATION & PUBLIC FACILITIES.

BASIS OF COORDINATES:
THE BASIS OF COORDINATES IS GPS PALM, A CONTINUOUSLY OPERATING REFERENCE STATION (CORS) MOUNTED ON THE DOT&PF MAINTENANCE BUILDING IN PALMER, ALASKA. SAID STATION HAS SV–1 COORDINATES OF 147896.4806 N, 481573.6333 E.

LOUNSBURY HELD THE RECORD VALUES FOR POINTS 2, 3, 5, 8 & 701 FROM THE SURVEY CONTROL DIAGRAM OF HHE–0441(8) AKSAS 51829: HSIP PALMER–WASILLA HIGHWAY, CENTER LEFT TURN LANE WIDENING, DATED APRIL 29, 2014, RECORDED UNDER P.R.D. PLAT NO. 2014–45, FIXED AT THEIR PUBLISHED COORDINATES.

BASIS OF BEARINGS:
THE BASIS OF BEARINGS IS A LOCAL GRID BEARING BETWEEN GPS PALM AND GPS MSB–1, AN NGS BRASS CAP LOCATED EAST OF THE MATANUSKA–SUSITNA BOROUGH BUILDING. THE LOCAL GRID BEARING BETWEEN GPS PALM AND GPS MSB–1 IS N 20° 36' 42" E AT A DISTANCE OF 5405.86 U.S. FEET. GPS MSB–1 HAS SV–1 COORDINATES OF 152956.3007 N, 483476.6610 E.

TRANSLATION PARAMETERS:
TO CONVERT THE LOCAL COORDINATES TO NAD83 (92) STATE PLANE U.S. FOOT COORDINATES, TRANSLATE USING +2624946.5706 FEET N, +1312508.8943 FEET E, AND SCALE USING 0.9998990458.

VERTICAL CONTROL STATEMENT

VERTICAL DATUM IS MSL 1929 NGVD, UTILIZING THE FOLLOWING BENCHMARKS:

VERTICAL BENCHMARK POINT #601, A 3.5" BRASS CAP STAMPED 'HDL BM PHPM–61,' FOUND IN THE SOUTHEAST CORNER OF A CONCRETE TRANSFORMER PAD. ELEVATION = 395.89 FEET, AS SHOWN ON THE SURVEY CONTROL DIAGRAM OF CFHWY00285 PARKS HIGHWAY: SEWARD MERIDIAN PARKWAY TO LUCUS ROAD PREVENTIVE MAINTENANCE, RECORDED UNDER P.R.D. PLAT NO. 2020–13.

VERTICAL BENCHMARK POINT #602, A COPPER COATED ROD. THE ELEVATION OF POINT #602 IS 348.15 FEET, AS SHOWN ON THE SURVEY CONTROL DIAGRAM OF HHE–0441(8) AKSAS 51829: HSIP PALMER–WASILLA HIGHWAY CENTER LEFT TURN LANE WIDENING, RECORDED UNDER P.R.D. PLAT NO. 2014–45.

SURVEY NOTES

1. ALL DIMENSIONS AND COORDINATES SHOWN ARE IN U.S. SURVEY FEET.
2. THE FIELD SURVEY WAS CONDUCTED BY LOUNSBURY AND ASSOCIATES, INC. FROM JUNE – JULY 2022.
3. PROJECT HORIZONTAL CONTROL WAS SURVEYED USING NETWORKED STATIC GPS TECHNIQUES. GPS MEASUREMENTS WERE PERFORMED USING TRIMBLE R12, R10 AND R8 RECEIVERS. IT WAS PROCESSED USING TRIMBLE BUSINESS CENTER V.5.70 SOFTWARE.
4. THE PURPOSE OF THIS SURVEY IS TO PROVIDE A DESIGN SURVEY, RECOVER CONTROLLING RIGHT OF WAY CORNERS AND LOCATE ALL MONUMENTS THAT COULD BE DISTURBED BY CONSTRUCTION, AND PREPARE A SURVEY CONTROL DRAWING (SCD) IN SUPPORT OF ENGINEERING DESIGN SERVICES FOR HERMON ROAD EXTENSION AND UPGRADE: PARKS HWY TO PALMER–WASILLA HWY, PROJECT CFHWY00799.
5. BACKGROUND SUBDIVISION AND PARCEL INFORMATION IS FOR ORIENTATION PURPOSES ONLY.
6. VERIFY HORIZONTAL AND VERTICAL CONTROL PRIOR TO USE. ON MULTI YEAR PROJECTS, VERIFY ALL CONTROL ON A SEASONAL BASIS.
7. THE PROJECT CENTERLINE IS NOT COINCIDENT WITH THE SECTION LINE.
8. SEE PLAT 2023–12 (SURVEY CONTROL DIAGRAM) FOR ADDITIONAL CONTROL IF NEEDED.

VERTICAL CONTROL SHOWN THIS SHEET						
POINT NO.	NORTHING	EASTING	ELEVATION	DESCRIPTION	STATION	OFFSET
602	147038	435432	348.15	Fd Copper Coated Rod: BM PW–1	52+54.30	1102.97R

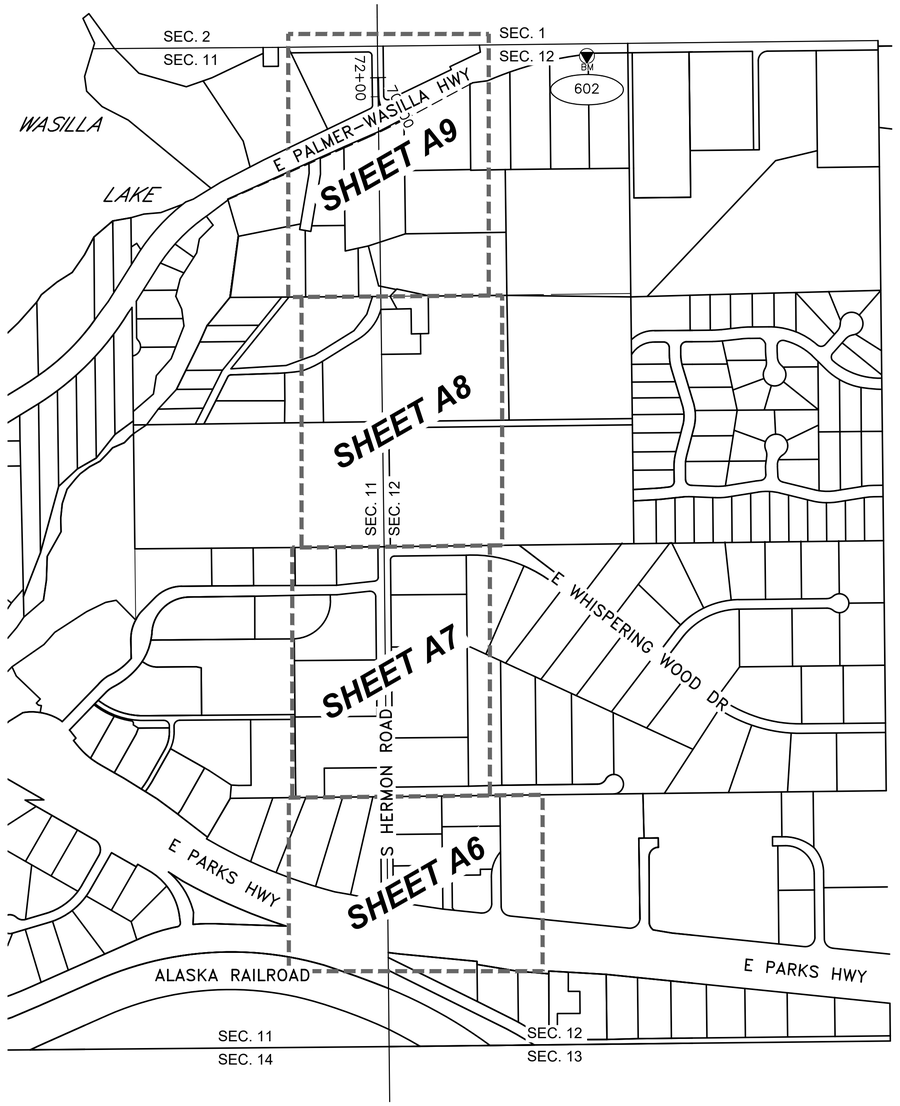

400 0 200 400
SCALE: 1"=400'
U.S. SURVEY FEET



WITHIN SECTIONS 11 & 12
TOWNSHIP 17 NORTH
RANGE 1 WEST
SEWARD MERIDIAN
ALASKA

LEGEND

BM BENCHMARK

POINT NUMBER IDENTIFIER

STATE OF ALASKA
49TH
PS&E REVIEW
AUGUST 2026
PROFESSIONAL LAND SURVEYOR

PLANS DEVELOPED BY:
LOUNSBURY & ASSOCIATES INC.
3230 C ST, SUITE 201,
ANCHORAGE, AK 99503
(907)272–5451
CERTIFICATE OF AUTHORITY NO. AECC391

STATE OF ALASKA
DEPARTMENT OF TRANSPORTATION
AND PUBLIC FACILITIES

HERMON RD EXTENSION AND UPGRADE, PARKS HWY TO PALMER–WASILLA HWY

SURVEY CONTROL SHEET

NO.	DATE	REVISION

STATE	PROJECT DESIGNATION	YEAR	SHEET NO.	TOTAL SHEETS
ALASKA	0001729/CFHWY00799	2027	A6	A9

DESIGNED BY AH
CHECKED BY JV
DRAFTED BY MH

SCALE

DATE 2/25/2026
TIME 3:56 PM

DRAWING LOCATION
T:\2022\22-009 HERMON ROAD EXTENSION\SURVEY\4_DWG\HERMON_RD_SCS.DWG

HORIZONTAL CONTROL SHOWN THIS SHEET						
POINT NO.	NORTHING	EASTING	ELEVATION	DESCRIPTION	STATION	OFFSET
20	142448.25	434453.91	388.90	Set Rbr/AC[Lounsbury]: CP-20	10+48.45	73.52R
21	143102.59	434352.06	389.52	Set Rbr/AC[Lounsbury]: CP-21	17+03.75	22.07L

VERTICAL CONTROL SHOWN THIS SHEET						
POINT NO.	NORTHING	EASTING	ELEVATION	DESCRIPTION	STATION	OFFSET
601	142712	434683	395.89	Fd BC[9235-S]: BM PHPM-601	13+10.00	305.12R

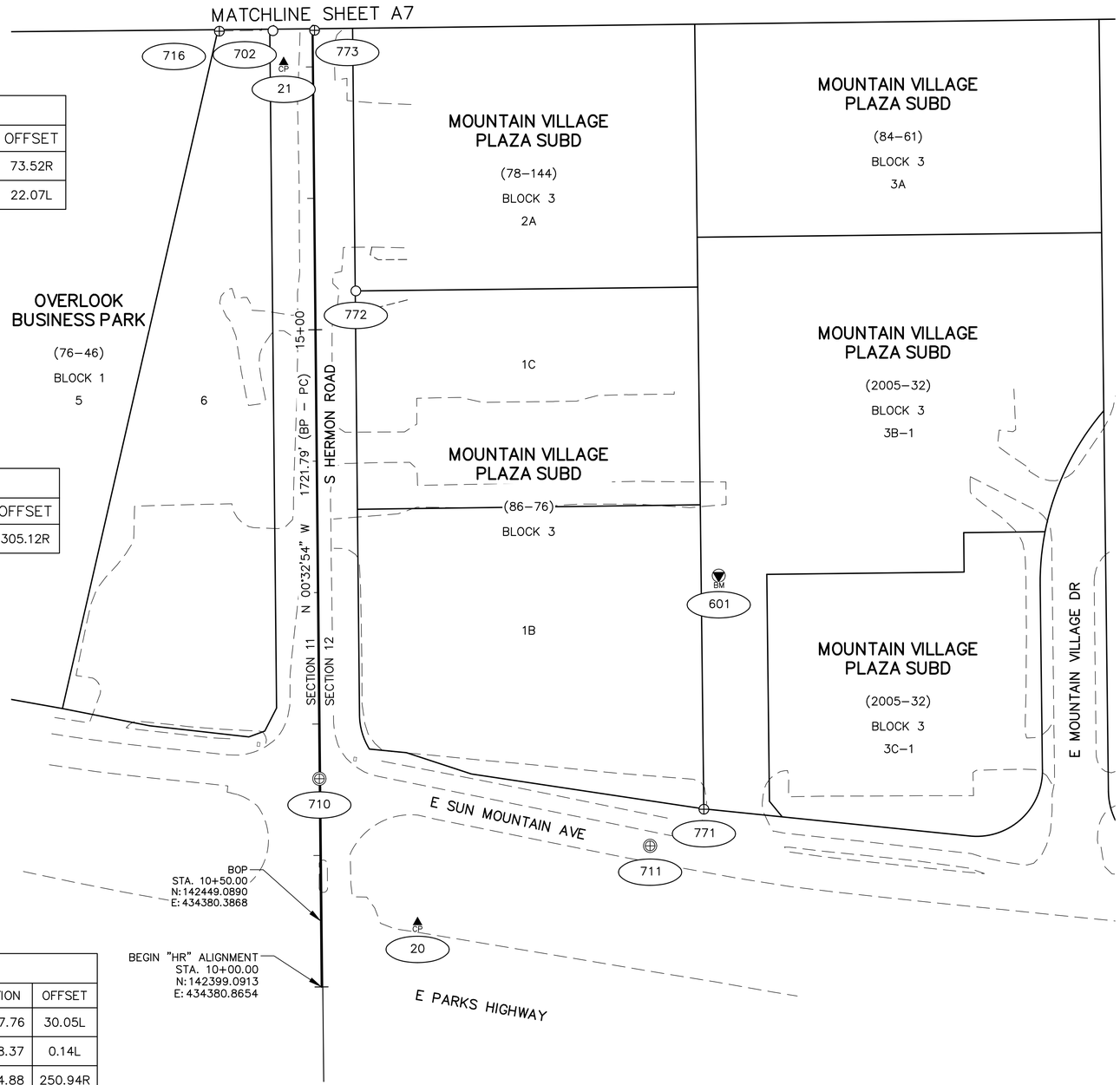

PROPERTY CORNERS SHOWN THIS SHEET					
POINT NO.	NORTHING	EASTING	DESCRIPTION	STATION	OFFSET
702	143126.5309	434343.8536	Fd Rbr/PC[10609]: SE L2 900 Tower Road	17+27.76	30.05L
710	142557.4573	434379.2050	Fd AC/Bx: PI 3+000.000	11+58.37	0.14L
711	142506.3648	434630.7909	Fd AC/Bx: PT 2+919.460	11+04.88	250.94R
716	143126.2109	434303.1123	Fd AM[11299]: NW L6 B1 Overlook Business Park	17+27.83	70.79L
771	142534.2449	434671.7086	Fd AM[8535]: SE L1B B3 Mountain Village Plaza	11+32.36	292.12R
772	142928.6009	434406.9436	Fd Rbr/PC: NW L1C B3 Mountain Village Plaza	15+29.24	31.15R
773	143126.8661	434375.5411	Fd BC: NE L6 B1 Overlook Business Park	17+27.79	1.64R

WITHIN SECTIONS 11 & 12
TOWNSHIP 17 NORTH
RANGE 1 WEST
SEWARD MERIDIAN
ALASKA

LEGEND

- CENTERLINE MONUMENT
- PRIMARY MONUMENT
- MISC. CORNER
- CP — CONTROL POINT
- BM — BENCHMARK
- ### — POINT NUMBER IDENTIFIER
- EDGE OF ASPHALT
- EDGE OF GRAVEL

50 0 25 50
SCALE: 1"=50"
U.S. SURVEY FEET

STATE OF ALASKA 49
PS&E REVIEW
AUGUST 2026
PROFESSIONAL LAND SURVEYOR

PLANS DEVELOPED BY:
LOUNSBURY & ASSOCIATES INC.
3230 C ST, SUITE 201,
ANCHORAGE, AK 99503
(907)272-5451
CERTIFICATE OF AUTHORITY NO. AECC391

STATE OF ALASKA
DEPARTMENT OF TRANSPORTATION
AND PUBLIC FACILITIES

HERMON RD EXTENSION AND UPGRADE, PARKS HWY TO PALMER-WASILLA HWY

SURVEY CONTROL SHEET

NO.	DATE	REVISION

STATE	PROJECT DESIGNATION	YEAR	SHEET NO.	TOTAL SHEETS
ALASKA	0001729/CFHWY00799	2027	A7	A9

DESIGNED BY	AH
CHECKED BY	JV
DRAFTED BY	MH

SCALE

DATE/TIME: 2/25/2026 3:56 PM

DRAWING LOCATION
I:\2022\22-009 HERMON ROAD EXTENSION\SURVEY\4_DWG\HERMON_RD_SCS.DWG

PROPERTY CORNERS SHOWN THIS SHEET					
POINT NO.	NORTHING	EASTING	DESCRIPTION	STATION	OFFSET
717	143281.5130	434339.3528	Fd Rbr/PC: NE L2 900 Tower Road	18+82.78	33.06L
718	143271.4793	434339.4500	Fd Rbr/PC[10609]: NE L2 900 Tower Road	18+72.74	33.06L
719	143271.5285	434342.4638	Fd Rbr/PC: NE L2 900 Tower Road	18+72.76	30.05L
720	144183.5716	434316.6943	Fd Rbr: NE PC L3 Sun Mountain	27+84.84	47.20L
721	144213.0338	434283.6312	Fd Rbr/AC[8535]: NE PT L3 Sun Mountain	28+14.36	80.11L
722	144265.9115	434310.5515	Fd Rbr: SE PC L5 B3 Maney Acres No 2	28+66.97	53.05L
723	144447.2838	434328.2752	Fd Rbr: NE L5 B3 Maney Acres No 2	30+47.95	36.04L
724	144398.1455	434414.7169	Fd Rbr: NW PC L9 B1 Whispering Woods	29+99.46	50.78R
725	144193.0253	434396.9434	Fd Rbr: SW L9 B1 Whispering Woods	27+93.84	33.10R
726	143438.0900	434404.4829	Fd Rbr: NW L6 B1 Whispering Woods	20+38.73	33.56R
727	143198.3171	434406.6085	Fd Rbr: SW PC L6 B1 Whispering Woods	17+98.94	33.39R

PROPERTY CORNERS SHOWN THIS SHEET					
POINT NO.	NORTHING	EASTING	DESCRIPTION	STATION	OFFSET
728	143178.4788	434427.1909	Fd Rbr: SW PT L6 B1 Whispering Woods	17+78.91	53.78R
755	143182.8562	434805.7415	Fd Rbr: SE L6 B1 Whispering Woods	17+79.66	432.36R
757	144292.1922	434330.2057	Fd Rbr: SE PT L5 B3 Maney Acres No 2	28+93.17	33.38L
759	144244.0677	434110.5801	Fd Rbr: SW L5 B3 Maney Acres No 2	28+45.68	253.06L
760	144193.9735	434110.4793	Fd Rbr: N AP L3 Sun Mountain	27+96.30	253.35L

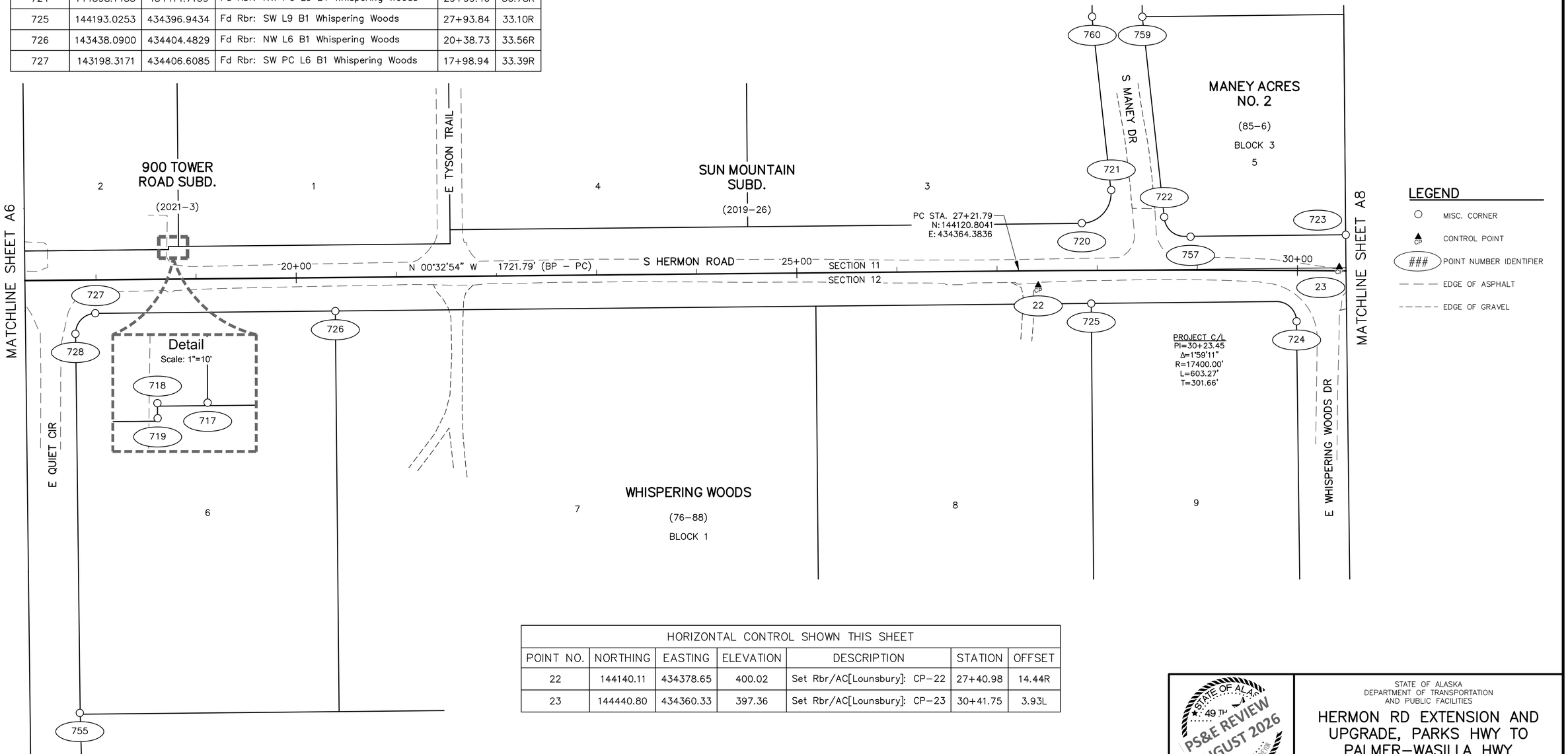

LEGEND

- MISC. CORNER
- CP CONTROL POINT
- ### POINT NUMBER IDENTIFIER
- EDGE OF ASPHALT
- EDGE OF GRAVEL

WITHIN SECTIONS 11 & 12
TOWNSHIP 17 NORTH
RANGE 1 WEST
SEWARD MERIDIAN
ALASKA

HORIZONTAL CONTROL SHOWN THIS SHEET						
POINT NO.	NORTHING	EASTING	ELEVATION	DESCRIPTION	STATION	OFFSET
22	144140.11	434378.65	400.02	Set Rbr/AC[Lounsbury]: CP-22	27+40.98	14.44R
23	144440.80	434360.33	397.36	Set Rbr/AC[Lounsbury]: CP-23	30+41.75	3.93L

50 0 25 50
SCALE: 1"=50'
U.S. SURVEY FEET

STATE OF ALASKA
49TH
PS&E REVIEW
AUGUST 2026
PROFESSIONAL LAND SURVEYOR

PLANS DEVELOPED BY:
LOUNSBURY & ASSOCIATES INC.
3230 C ST, SUITE 201,
ANCHORAGE, AK 99503
(907)272-5451
CERTIFICATE OF AUTHORITY NO. AECC391

STATE OF ALASKA
DEPARTMENT OF TRANSPORTATION
AND PUBLIC FACILITIES

HERMON RD EXTENSION AND UPGRADE, PARKS HWY TO PALMER-WASILLA HWY

SURVEY CONTROL SHEET

NO.	DATE	REVISION

STATE	PROJECT DESIGNATION	YEAR	SHEET NO.	TOTAL SHEETS
ALASKA	0001729/CFHWY00799	2027	A8	A9

DESIGNED BY AH
CHECKED BY JV
DRAFTED BY MH

SCALE

DATE 2/25/2026
TIME 3:56 PM

DRAWING LOCATION
T:\2022\22-009 HERMON ROAD EXTENSION\SURVEY\4_DWG\HERMON_RD_SCS.DWG

PROPERTY CORNERS SHOWN THIS SHEET					
POINT NO.	NORTHING	EASTING	DESCRIPTION	STATION	OFFSET
735	145700.3514	434344.4181	Fd Rbr/PC[2234]: NE L4 Chris	43+00.46	49.14L
736	145545.6347	434228.1447	Fd Rbr: PC N Line L4 Chris	41+42.88	161.50L
737	145426.0504	434035.6047	Fd Rbr: NW L4 Chris	40+18.50	350.97L
739	145704.0650	434503.5320	Fd IP: NE Deed 2016-026011-0	43+08.17	109.83R
740	145571.0707	434505.4177	Fd IP: NE Deed 2016-026011-0	41+75.26	115.05R
741	145465.8460	434554.4469	Fd IP: SE Deed 2016-026011-0	40+71.30	166.71R
756	145103.4516	434041.3258	Fd Rbr: SW L4 Chris	36+96.14	337.16L
804	144447.4522	434361.2450	Fd BC[GLO]: 1/4 S11|S12 *T17N R1W SM	30+48.42	3.08L
812	145769.9419	434300.0167	Fd Rbr: NE Tract 1A Edlund	43+68.92	95.28L
814	145769.7756	434392.5471	Fd IP: AP West Line Deed 2016-016236-0	43+71.07	2.77L
819	145108.1211	434352.4575	Fd AM[2234]: S-N 1/64 S11|S12 *T17N R1W SM	37+08.62	26.24L
821	145463.1609	434346.7566	Fd IP: SW Deed 2016-026011-0	40+63.40	40.85L

WITHIN SECTIONS 11 & 12
TOWNSHIP 17 NORTH
RANGE 1 WEST
SEWARD MERIDIAN
ALASKA

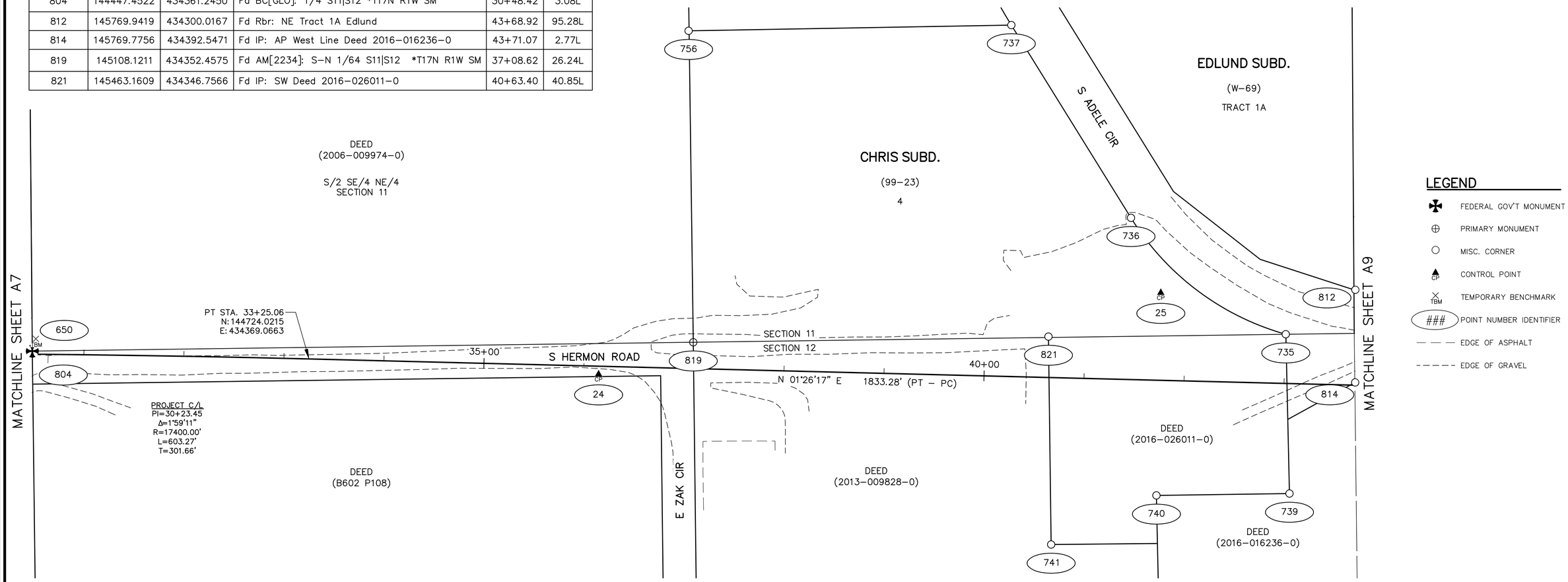

LEGEND

- FEDERAL GOV'T MONUMENT
- PRIMARY MONUMENT
- MISC. CORNER
- CONTROL POINT
- TEMPORARY BENCHMARK
- ### POINT NUMBER IDENTIFIER
- EDGE OF ASPHALT
- EDGE OF GRAVEL

HORIZONTAL CONTROL SHOWN THIS SHEET						
POINT NO.	NORTHING	EASTING	ELEVATION	DESCRIPTION	STATION	OFFSET
24	145013.51	434384.32	360.84	Set Rbr/AC[Lounsbury]: CP-24	36+14.83	7.99R
25	145575.47	434302.93	352.39	Set Rbr/AC[Lounsbury]: CP-25	41+74.58	87.49L

VERTICAL CONTROL SHOWN THIS SHEET						
POINT NO.	NORTHING	EASTING	ELEVATION	DESCRIPTION	STATION	OFFSET
650	144451	434349	400.56	Set Spike in 14" Poplar: TBM 650	30+51.85	15.36L

50 0 25 50
SCALE: 1"=50"
U.S. SURVEY FEET

STATE OF ALASKA
PS&E REVIEW
AUGUST 2026
PROFESSIONAL LAND SURVEYOR

PLANS DEVELOPED BY:
LOUNSBURY & ASSOCIATES INC.
3230 C ST, SUITE 201,
ANCHORAGE, AK 99503
(907)272-5451
CERTIFICATE OF AUTHORITY NO. AECC391

STATE OF ALASKA
DEPARTMENT OF TRANSPORTATION
AND PUBLIC FACILITIES

HERMON RD EXTENSION AND UPGRADE, PARKS HWY TO PALMER-WASILLA HWY

SURVEY CONTROL SHEET

NO.	DATE	REVISION

STATE	PROJECT DESIGNATION	YEAR	SHEET NO.	TOTAL SHEETS
ALASKA	0001729/CFHWY00799	2027	B1	B4

DESIGNED BY SRT
CHECKED BY KLK
DRAFTED BY JHK

SCALE AS SHOWN

DATE TIME 9/28/2026 8:40 AM

DRAWING LOCATION C:\DOWL_PW\D0433398\00799_B.DWG

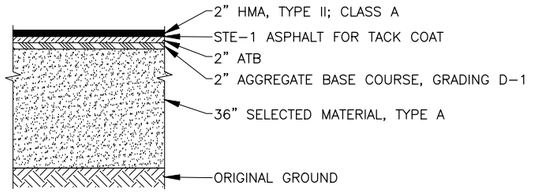

STRUCTURAL SECTION NO. 1

STA "HR" 11+60.63 TO STA "HR" 53+21.52
STA "SM" 400+00 TO STA "SM" 400+93

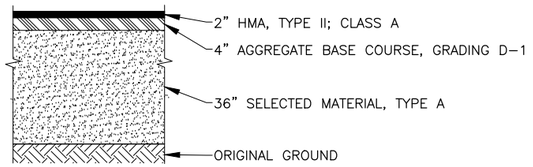

STRUCTURAL SECTION NO. 2

STA "BS" 70+27.69 TO STA "BS" EOP
STA "MV" 100+63 TO STA "MV" 101+00
STA "QC" 200+63 TO STA "QC" 201+00
STA "TT" 300+63 TO STA "TT" 302+39
STA "WW" 500+62 TO STA "WW" 501+00

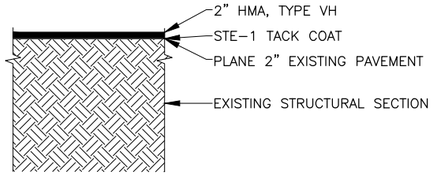

STRUCTURAL SECTION NO. 3

STA "PW" 902+95.00 TO STA "PW" 907+18.16

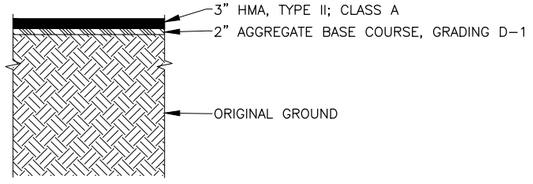

STRUCTURAL SECTION NO. 4

STA "HR" BOP TO STA "HR" 11+60.63

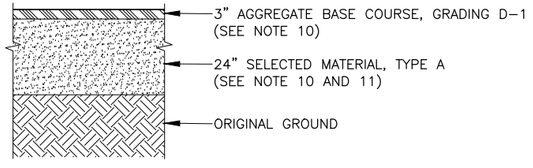

STRUCTURAL SECTION NO. 5 (APPROACHES)

STA "SM" 400+93 TO STA "SM" 401+82
STA "ZC" 600+56 TO STA "ZC" 601+00
STA "AC" 700+56 TO STA "AC" 702+86
STA "TC" 800+36 TO STA "TC" 800+59

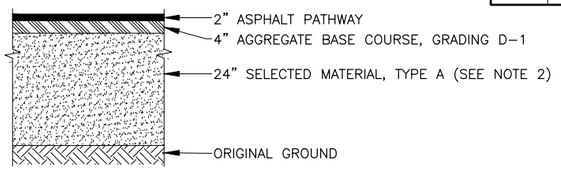

PATHWAY STRUCTURAL SECTION NO. 1

STA "HR" 12+30 TO STA "HR" 13+15
STA "HR" 13+90.17 TO STA "HR" EOP

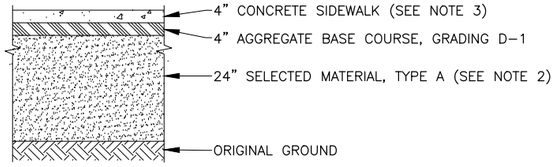

SIDEWALK STRUCTURAL SECTION NO. 1

STA "HR" BOP TO STA "HR" 12+30.00
STA "HR" 13+15 TO STA "HR" 13+90.17

NOTES:

1. WITHIN TWO (2) DAYS AFTER PAVING INCLUDING INSTALLATION OF ASPHALT SAFETYEDGE^{SM}, PLACE AGGREGATE BASE COURSE, GRADING D-1 AGAINST PAVEMENT EDGE TO ENSURE THERE IS NO VERTICAL DROP AT THE EDGE OF PAVEMENT. USE APPROVED TRAFFIC CONTROL DEVICES IN THE INTERIM.
2. BOTTOM ELEVATION AND CROSS-SLOPE OF SELECTED MATERIAL, TYPE A SHALL BE CONSISTENT WITH ADJACENT MAIN ROADWAY SECTION TO MAINTAIN POSITIVE DRAINAGE. INCREASE SELECTED MATERIAL, TYPE A LAYER THICKNESS AS NECESSARY TO MATCH THE ADJACENT SECTION.
3. INCREASE TOTAL THICKNESS TO 6 INCHES AT CURB CUTS.
4. PAVEMENT STRUCTURAL SECTION NO. 1 SHALL APPLY FROM THE MAINLINE TO THE APPROACH RADIUS RETURNS, UNLESS OTHERWISE STATED ON THE PLANS.
5. INCREASE LAYER THICKNESS TO MATCH THE BOTTOM OF ADJACENT ROADWAY TYPE A.
6. GEOTEXTILE SHALL BE USED WHERE SEPARATION IS NEEDED BETWEEN SILTY SOIL AND ROADWAY SECTION AS DIRECTED BY THE ENGINEER.
7. SEE "F" AND "G" SHEETS FOR INTERSECTION, MEDIAN OPENING, LANE DIRECTION CHANGE, TURN-LANE TAPER, BEGINNING AND ENDING STATIONS AND OFFSETS.
8. PAVEMENT FINISHED GRADE SHALL BE 1/4" ABOVE THE GUTTER PAN.
9. USE A 20 FOOT TRANSITION WHEN TRANSITIONING FROM AN OUTSIDE PATHWAY V-DITCH TO A TYPICAL FLAT BOTTOM DITCH ON THE PATHWAY SIDE, SEE SHEET B3 FOR TYPICALS.
10. APPROACHES AND DRIVEWAYS NOT LISTED SHALL CONSIST OF 2" AGGREGATE BASE COURSE, GRADING D-1 AND 12" SELECTED MATERIAL, TYPE A.
11. INSTALL GEOTEXTILE, SEPARATION, CLASS 3 AND 24" SELECTED MATERIAL TYPE A WHERE REALIGNMENT IS PROPOSED AND/OR FINISHED PROFILE IS 6" LOWER THAN EXISTING GROUND.

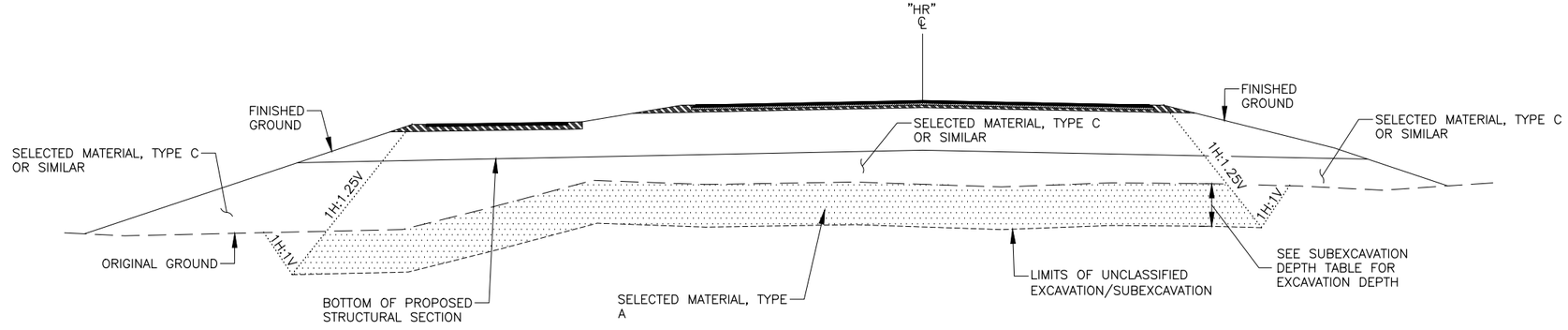

SUBEXCAVATION DETAIL

SUBEXCAVATION DEPTH TABLE

BEGIN STATION	END STATION	OFFSET	DEPTH (FT)	REMARKS
"HR" 35+00	"HR" 38+00	RT/LT	3.5	
"HR" 47+50	"HR" 53+21.52	RT/LT	3.0	

SUBEXCAVATION NOTES:

1. A 10:1 TRANSITION SECTION PARALLEL TO CENTERLINE WILL BE USED INTO AND OUT OF SUBEXCAVATION ZONES.
2. THE BACKFILL OPERATION SHALL PROCEED CONTINUOUSLY DIRECTLY BEHIND THE SUBEXCAVATION
3. EXCAVATE TO FIRM BOTTOM OR AS DIRECTED BY THE ENGINEER, REFER TO SUBEXCAVATION DEPTH TABLE.



DOWL, LLC
5015 BUSINESS PARK BLVD
SUITE 4000
ANCHORAGE, AK 99503
(907) 562-2000
#AECL848 - AK

STATE OF ALASKA
DEPARTMENT OF TRANSPORTATION
AND PUBLIC FACILITIES

HERMON RD EXTENSION AND UPGRADE, PARKS HWY TO PALMER-WASILLA HWY

TYPICAL SECTIONS

NO.	DATE	REVISION

STATE	PROJECT DESIGNATION	YEAR	SHEET NO.	TOTAL SHEETS
ALASKA	0001729/CFHWY00799	2027	B2	B4

DESIGNED BY SRT
CHECKED BY KLK
DRAFTED BY JHK

SCALE AS SHOWN

DATE 9/28/2026 TIME 8:40 AM

DRAWING LOCATION C:\DOWL_PW\D0433398\00799_B.DWG

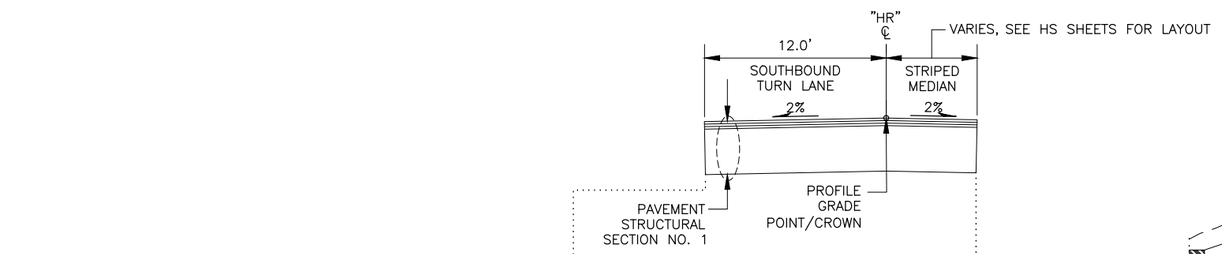

STRIPED MEDIAN EXCEPTION

STA "HR" 11+80 TO STA "HR" 12+85

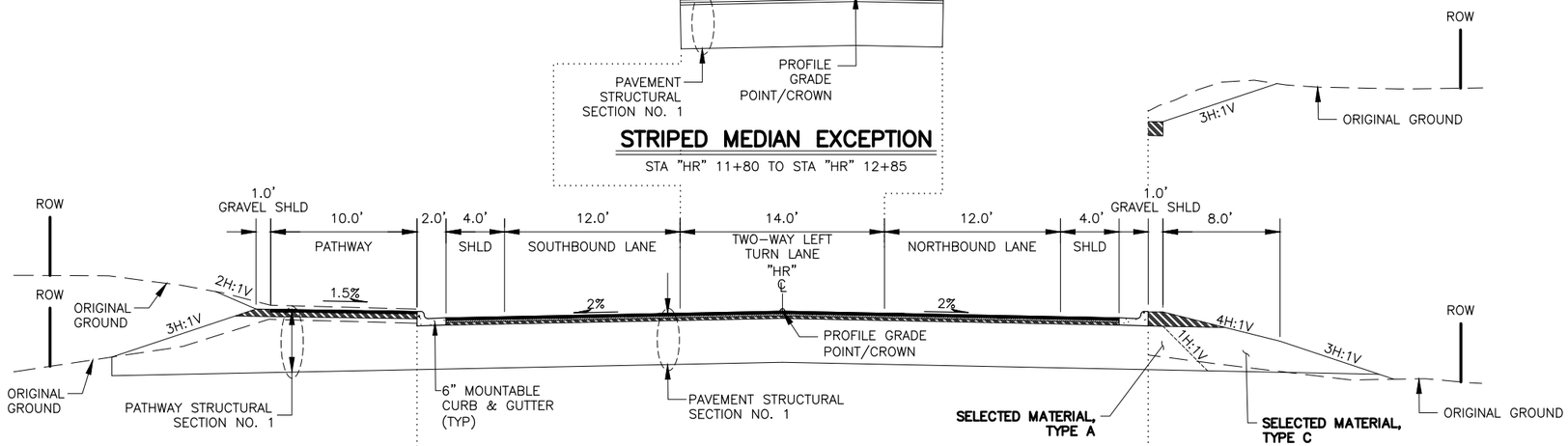

TWLTL HERMON ROAD SECTION – CURBED

STA "HR" 11+81.40 TO STA "HR" 28+70

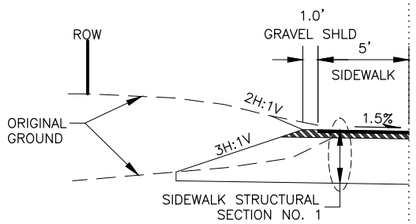

SIDEWALK SECTION

STA "HR" 11+81.40 TO STA "HR" 12+17.33
STA "HR" 13+51.16 TO STA "HR" 13+75.22

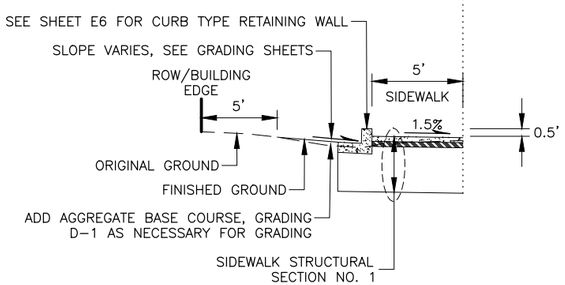

WALL SECTION

STA "HR" 12+17.33 TO STA "HR" 13+51.16

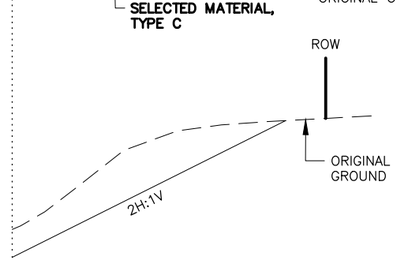

NO GRAVEL SHOULDER

STA "HR" 11+64 to 13+50 RT

PS&E REVIEW AUGUST 2026

DOWL, LLC
5015 BUSINESS PARK BLVD
SUITE 4000
ANCHORAGE, AK 99503
(907) 562-2000
#AECL848 – AK

STATE OF ALASKA
DEPARTMENT OF TRANSPORTATION AND PUBLIC FACILITIES

HERMON RD EXTENSION AND UPGRADE, PARKS HWY TO PALMER-WASILLA HWY

TYPICAL SECTIONS

NO.	DATE	REVISION

STATE	PROJECT DESIGNATION	YEAR	SHEET NO.	TOTAL SHEETS
ALASKA	0001729/CFHWY00799	2027	B3	B4

DESIGNED BY SRT
CHECKED BY KLK
DRAFTED BY JHK

SCALE AS SHOWN

DATE TIME 9/28/2026 8:41 AM

DRAWING LOCATION C:\DOWL_PW\D0433398\00799_B.DWG

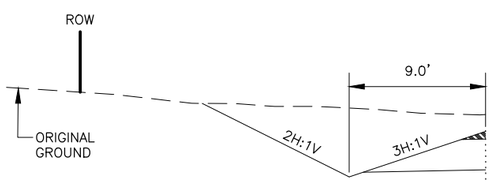

PATHWAY V-DITCH

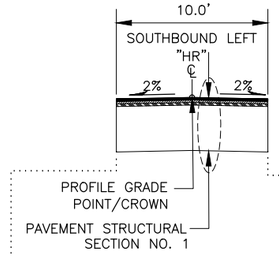

SOUTHBOUND LEFT

STA "HR" 30+62 TO STA "HR" 31+12

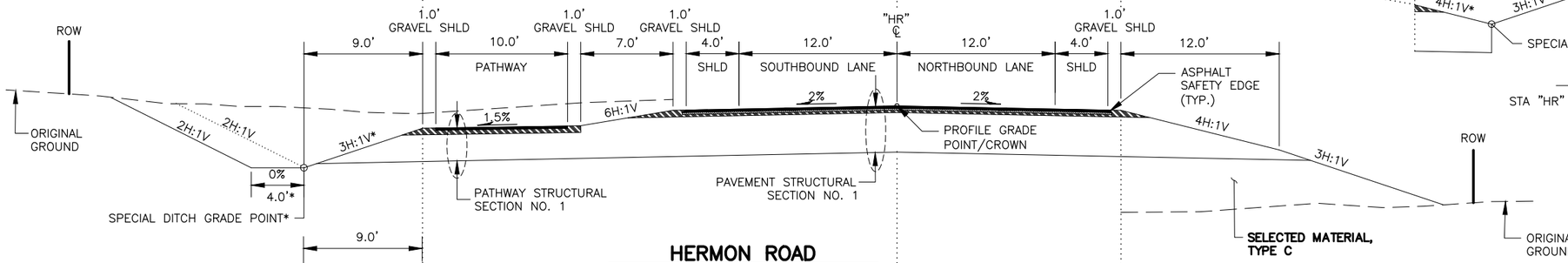

HERMON ROAD

STA "HR" 28+70 TO STA "HR" 53+21.52

* REFER TO SUMMARY TABLES FOR SPECIAL DITCH LAYOUT

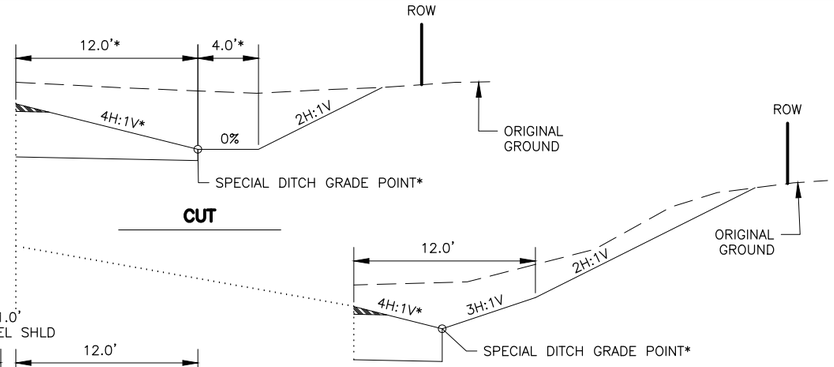

CUT

CUT A

STA "HR" 28+70 TO STA "HR" 29+60

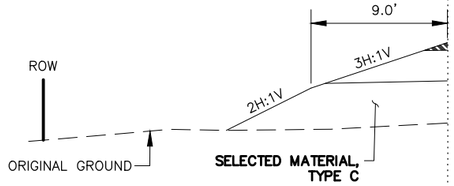

PATHWAY FILL

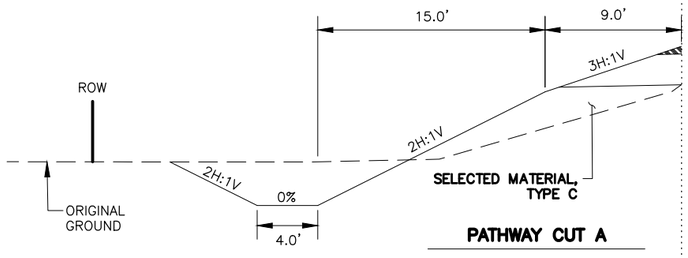

PATHWAY CUT A

STA "HR" 38+68 TO STA "HR" 40+50

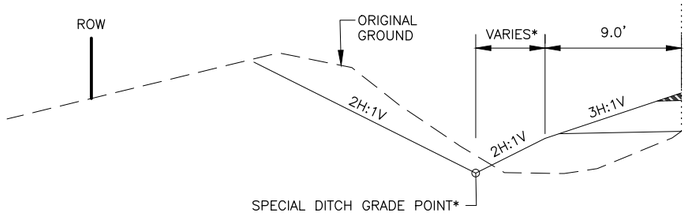

PATHWAY CUT B

STA "HR" 32+20 TO STA "HR" 33+11

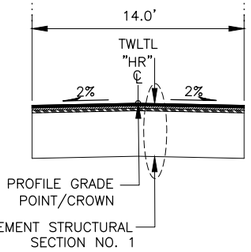

TWLT HERMON ROAD SECTION – UNCURBED

STA "HR" 28+70 TO STA "HR" 29+62

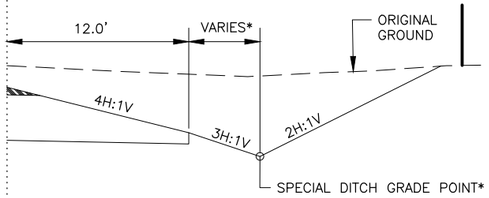

CUT B

STA "HR" 32+50 TO STA "HR" 33+51

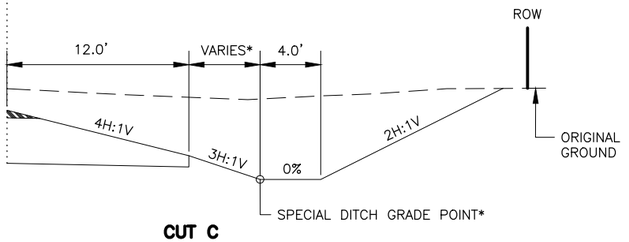

CUT C

STA "HR" 38+25 TO STA "HR" 39+56
STA "HR" 44+44 TO STA "HR" 45+00

PS&E REVIEW AUGUST 2026

DOWL, LLC
5015 BUSINESS PARK BLVD
SUITE 4000
ANCHORAGE, AK 99503
(907) 562-2000
#AECL848 – AK

STATE OF ALASKA
DEPARTMENT OF TRANSPORTATION AND PUBLIC FACILITIES

HERMON RD EXTENSION AND UPGRADE, PARKS HWY TO PALMER-WASILLA HWY

TYPICAL SECTIONS

NO.	DATE	REVISION

STATE	PROJECT DESIGNATION	YEAR	SHEET NO.	TOTAL SHEETS
ALASKA	0001729/CFHWY00799	2027	B4	B4

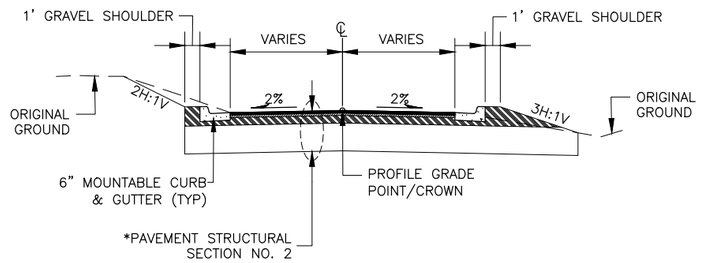

APPROACH SECTION – CURBED

STA "BS" 70+27.69 LT TO STA "BS" 70+59.20 LT
STA "BS" 70+27.69 RT TO STA "BS" 70+70.00 RT
STA "MV" 100+23.00 TO STA "MV" 100+75.00
STA "QC" 200+23.00 TO STA "QC" 200+75.00
STA "TT" 300+23.00 TO STA "TT" 302+39.00
STA "SM" 400+23.10 LT TO STA "SM" 400+75.00 LT

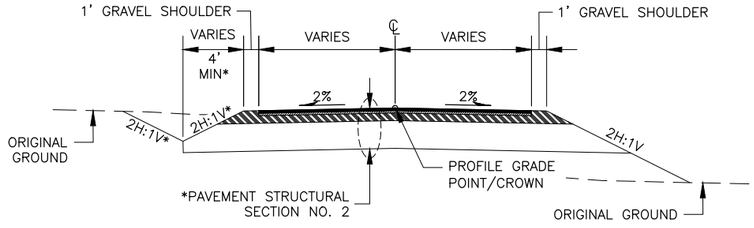

APPROACH SECTION – UNCURBED

STA "BS" 70+59.20 LT TO STA "BS" 71+75.00 LT
STA "BS" 70+70.00 RT TO STA "BS" 71+75.00 RT
STA "MV" 100+75.00 TO STA "MV" 101+00.00
STA "QC" 200+75.00 TO STA "QC" 201+00.00
STA "SM" 400+75.00 LT TO STA "SM" 401+77.87 LT
STA "SM" 400+23.10 RT TO STA "SM" 401+86.18 RT
STA "WW" 500+21.68 TO STA "WW" 501+00.00
STA "ZC" 600+16.01 TO STA "ZC" 601+00.00
STA "AC" 700+16.00 TO STA "AC" 702+86.32

* REFER TO SUMMARY TABLES FOR SPECIAL DITCH LAYOUT

STATE OF ALASKA
PS&E REVIEW
MAY 2026
PROFESSIONAL ENGINEER

PLANS DEVELOPED BY:
LOUNSBURY & ASSOCIATES INC.
3230 C ST, SUITE 201,
ANCHORAGE, AK 99503
(907)272-5451
CERTIFICATE OF AUTHORITY NO. AECC391

STATE OF ALASKA
DEPARTMENT OF TRANSPORTATION
AND PUBLIC FACILITIES

HERMON RD EXTENSION AND UPGRADE, PARKS HWY TO PALMER–WASILLA HWY

TYPICAL SECTIONS

DESIGNED BY SRT
CHECKED BY KLK
DRAFTED BY JHK

SCALE AS SHOWN

DATE 9/28/2026 TIME 8:41 AM

DRAWING LOCATION
C:_DOWL_PW\D0433398\00799_B.DWG

NO.	DATE	REVISION

STATE	PROJECT DESIGNATION	YEAR	SHEET NO.	TOTAL SHEETS
ALASKA	0001729/CFHWY00799	2027	A9	A9

DESIGNED BY	AH
CHECKED BY	JV
DRAFTED BY	MH

SCALE

DATE TIME 2/25/2026 3:56 PM

DRAWING LOCATION
T:\2022\22-009 HERMON ROAD EXTENSION\SURVEY\4_DWG\HERMON_RD_SCS.DWG

HORIZONTAL CONTROL SHOWN THIS SHEET						
POINT NO.	NORTHING	EASTING	ELEVATION	DESCRIPTION	STATION	OFFSET
5	146623.10	434197.31	332.75	Fd Rbr/PC[DOT]: CP-5	53+17.04	194.95L
26	146524.81	434289.83	329.82	Set Rbr/AC[Lounsbury]: CP-26	51+23.29	124.40L

VERTICAL CONTROL SHOWN THIS SHEET						
POINT NO.	NORTHING	EASTING	ELEVATION	DESCRIPTION	STATION	OFFSET
651	145815	434377	338.09	Set Spike in 16" Birch: TBM 651	44+15.89	19.45L

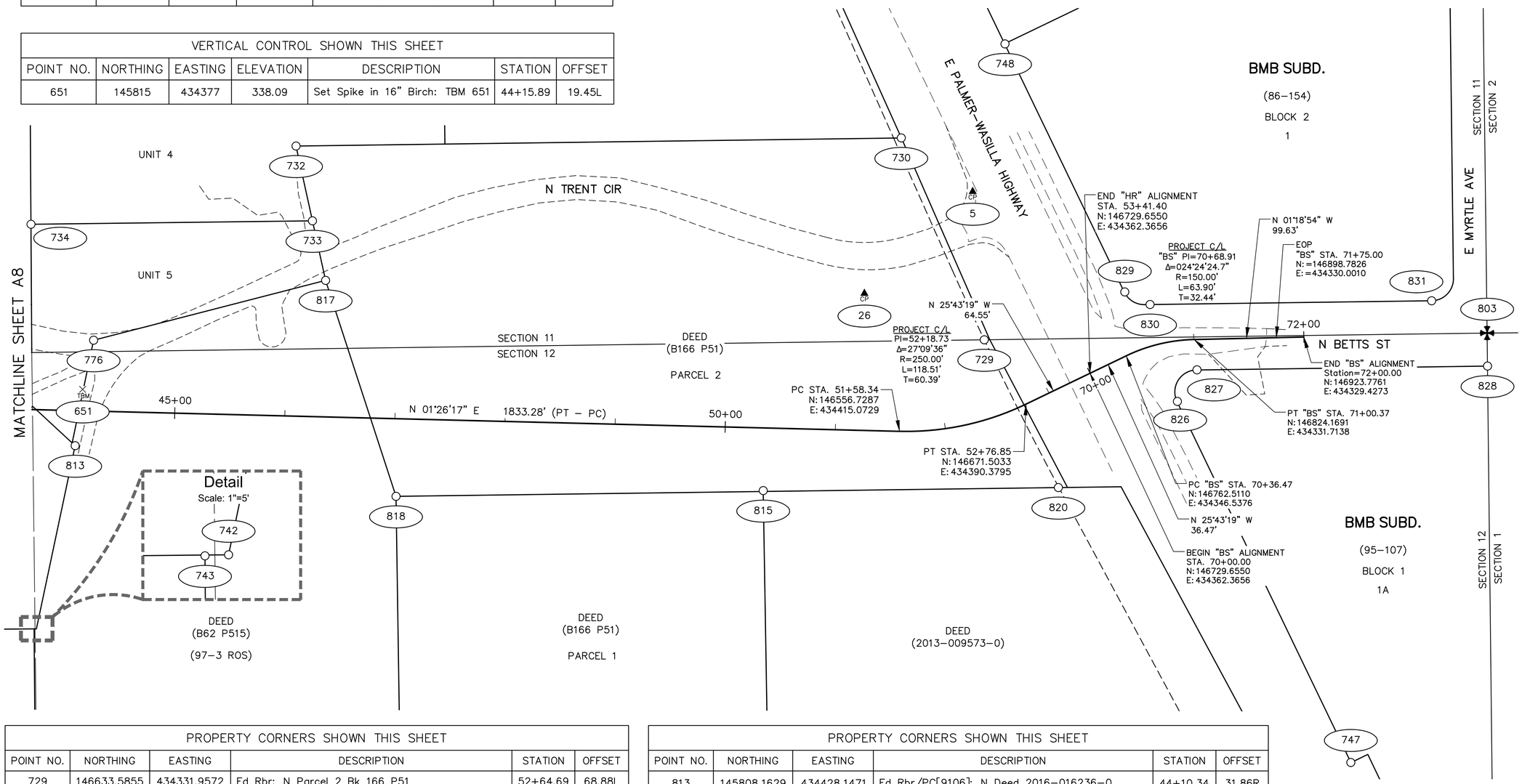

WITHIN SECTIONS 11 & 12
TOWNSHIP 17 NORTH
RANGE 1 WEST
SEWARD MERIDIAN
ALASKA

LEGEND

- FEDERAL GOV'T MONUMENT
- CENTERLINE MONUMENT
- MISC. CORNER
- CP — CONTROL POINT
- TBM — TEMPORARY BENCHMARK
- ### — POINT NUMBER IDENTIFIER
- RIGHT OF WAY EASEMENT
- EDGE OF ASPHALT
- EDGE OF GRAVEL

50 0 25 50
SCALE: 1"=50"
U.S. SURVEY FEET

PROPERTY CORNERS SHOWN THIS SHEET					
POINT NO.	NORTHING	EASTING	DESCRIPTION	STATION	OFFSET
729	146633.5855	434331.9572	Fd Rbr: N Parcel 2 Bk 166 P51	52+64.69	68.88L
730	146558.2517	434148.6556	Fd Rbr: NE Guardian View Plaza Unit 1	51+53.18	266.37L
732	146008.6958	434156.0256	Fd Rbr/PC[9106]: SW Parcel 2 Bk166 P51	46+03.98	245.21L
733	146023.6304	434223.9165	Fd Rbr/PC[9106]: NW Unit 5 Guardian View Plaza	46+20.61	177.72L
734	145768.0585	434227.0639	Fd Rbr/PC[9106]: SW Unit 5 Guardian View Plaza	43+65.20	168.16L
742	145773.0087	434594.4384	Fd Rbr/PC[9106]: NE Deed 2016-016236-0	43+79.37	198.98R
743	145770.8662	434594.5328	Fd Rbr/PC[9106]: NE Deed 2016-016236-0	43+77.23	199.12R
747	146966.4374	434715.8369	Fd Rbr/AC[11547]: SE L1A B1 BMB		
748	146652.4400	434063.2944	Fd Rbr: SW L1 B2 BMB		
776	145824.9070	434332.3512	Fd Rbr: E Unit 5 Guardian View Plaza	44+24.67	64.33L
803	147090.1841	434325.8305	Fd AM/BX[BLM]: S2|S1/S11|S12 *T17N R1W SM		

PROPERTY CORNERS SHOWN THIS SHEET					
POINT NO.	NORTHING	EASTING	DESCRIPTION	STATION	OFFSET
813	145808.1629	434428.1471	Fd Rbr/PC[9106]: N Deed 2016-016236-0	44+10.34	31.86R
815	146432.9163	434468.9100	Fd Rbr: SW Deed 2013-009573-0	50+35.92	56.93R
817	146035.5552	434278.0078	Fd Rbr/PC[9106]: NE Unit 5 Guardian View Plaza	46+33.89	123.94L
818	146099.4925	434474.1252	Fd Rbr/PC[9106]: SW Parcel 1 B166 P52	47+02.73	70.51R
820	146700.8645	434466.1660	Fd Rbr: NW Parcel 2 B166 P51	52+71.99	81.08R
826	146808.9805	434387.9200	Fd Rbr: SW PC L1A B1 BMB		
827	146826.7673	434359.2741	Fd Rbr: SW PT L1A B1 BMB		
828	147090.5273	434355.8563	Fd Rbr/PC/BX[2234]: NW L1A B1 BMB		
829	146761.1729	434288.4973	Fd Rbr: SW PC L1 B2 BMB		
830	146784.1084	434299.9530	Fd Rbr: SW PT L1 B2 BMB		
831	147039.7949	434296.5745	Fd Rbr: N PC E Line L1 B2 BMB		

STATE OF ALASKA
49 TH
PS&E REVIEW
AUGUST 2026
SURVEY LAND SERVICES

PLANS DEVELOPED BY:
LOUNSBURY & ASSOCIATES INC.
3230 C ST, SUITE 201,
ANCHORAGE, AK 99503
(907)272-5451
CERTIFICATE OF AUTHORITY NO. AECC391

STATE OF ALASKA
DEPARTMENT OF TRANSPORTATION
AND PUBLIC FACILITIES

HERMON RD EXTENSION AND UPGRADE, PARKS HWY TO PALMER-WASILLA HWY

SURVEY CONTROL SHEET

NO.	DATE	REVISION

STATE	PROJECT DESIGNATION	YEAR	SHEET NO.	TOTAL SHEETS
ALASKA	0001729/CFHWY00799	2027	C1	C2

DESIGNED BY SRT
CHECKED BY KLK
DRAFTED BY JHK

SCALE N/A

DATE TIME 8/7/2026 11:07 AM

DRAWING LOCATION
C:\DOWL_PW\0043409\00799_C01_EST.DWG

ESTIMATE OF QUANTITIES

ITEM NO.	ITEM DESCRIPTION	PAY UNIT	TOTAL QUANTITY
201.0003.0000	CLEARING AND GRUBBING	ACRE	8
202.0001.0000	REMOVAL OF STRUCTURES AND OBSTRUCTIONS	LS	ALL REQUIRED
202.0002.0000	REMOVAL OF PAVEMENT	SY	9,650
202.0003.0000	REMOVAL OF SIDEWALK	SY	46
202.0004.0000	REMOVAL OF CULVERT PIPE	LF	200
202.0007.0000	REMOVAL OF JUNCTION BOX	EACH	2
202.0009.0000	REMOVAL OF CURB AND GUTTER	LF	780
202.2022.0000	REMOVAL OF FENCE	LF	760
202.2023.0000	PAVEMENT PLANING	SY	2,300
203.0003.0000	UNCLASSIFIED EXCAVATION	CY	71,000
203.0006.000A	BORROW, TYPE A	TON	96,000
203.0009.0000	OBLITERATION OF ROADWAY	SY	950
203.2008.0000	SPECIAL DITCH	LF	1,650
205.0004.0000	POROUS BACKFILL MATERIAL	CY	211
206.0001.0000	FILTER BLANKET	CY	174
301.0001.00D1	AGGREGATE BASE COURSE, GRADING D-1	TON	5,000
306.0001.0000	ATB	TON	2,350
306.0002.5240	ASPHALT BINDER, GRADE PG 52-40 E	TON	125
401.0001.002A	HMA, TYPE II; CLASS A	TON	2,900
401.0004.5240	ASPHALT BINDER, GRADE PG 52-40 E	TON	168
401.0008.002A	HMA PRICE ADJUSTMENT, TYPE II; CLASS A	CS	ALL REQUIRED
401.0009.0000	LONGITUDINAL JOINT DENSITY PRICE ADJUSTMENT, METHOD 1	CS	ALL REQUIRED
401.0010.0001	PAVEMENT SMOOTHNESS PRICE ADJUSTMENT, METHOD 1	CS	ALL REQUIRED
401.2021.0000	ASPHALT BINDER PRICE ADJUSTMENT	CS	ALL REQUIRED
402.0001.STE1	STE-1 ASPHALT FOR TACK COAT	TON	6.9
408.2001.00VH	HMA, TYPE VH	TON	261
603.0001.0024	CSP 24 INCH	LF	57
603.0003.0024	END SECTION FOR CSP 24 INCH	EACH	8
603.0003.0036	END SECTION FOR CSP 36 INCH	EACH	4
603.0021.0018	CORRUGATED POLYETHEYLENE PIPE 18 INCH	LF	1,050
603.0021.0024	CORRUGATED POLYETHEYLENE PIPE 24 INCH	LF	198
603.2004.0036	HDPE PIPE 36 INCH	LF	270
603.2017.0000	CULVERT CLEANING	LF	66
604.0001.0001	STORM SEWER MANHOLE, TYPE I	EACH	9
604.0004.0000	ADJUST EXISTING MANHOLE	EACH	2
604.0005.000A	INLET, TYPE A	EACH	5
607.0003.0000	CHAIN LINK FENCE	LF	176
607.0005.0000	DRIVE GATE	EACH	1
608.0001.0004	CONCRETE SIDEWALK, 4 INCHES THICK	SY	131
608.0001.0006	CONCRETE SIDEWALK, 6 INCHES THICK	SY	45
608.0006.0000	CURB RAMP	EACH	13
608.2002.0000	ASPHALT PATHWAY	TON	482
608.2010.0000	CONCRETE SIDEWALK WALL, TYPE I, SLAB 8IN, WALL 8IN, HT 1FT	LF	134
608.2017.0000	DETECTABLE WARNING TILE	EACH	3

ESTIMATE OF QUANTITIES

ITEM NO.	ITEM DESCRIPTION	PAY UNIT	TOTAL QUANTITY
609.0002.0001	CURB AND GUTTER, TYPE 1	LF	4,250
610.0002.0000	DITCH LINING	TON	301
611.0001.0001	RIPRAP, CLASS I	CY	40
615.0001.0000	STANDARD SIGN	SF	520
615.0006.0000	SALVAGE SIGN	EACH	27
618.0001.0000	SEEDING	ACRE	5.1
620.0001.0000	TOPSOIL	SY	24,700
627.0006.0000	FIRE HYDRANT RELOCATION	EACH	1
627.0010.0000	ADJUSTMENT OF VALVE BOX	EACH	2
631.0001.0002	GEOTEXTILE, DRAINAGE, CLASS 2	SY	830
639.2000.0000	APPROACH	EACH	22
640.0001.0000	MOBILIZATION AND DEMOBILIZATION	LS	ALL REQUIRED
641.0001.0000	EROSION, SEDIMENT AND POLLUTION CONTROL ADMINISTRATION	LS	ALL REQUIRED
641.0005.0000	TEMPORARY EROSION, SEDIMENT AND POLLUTION CONTROL BY DIRECTIVE	CS	ALL REQUIRED
641.0006.0000	WITHHOLDING	CS	ALL REQUIRED
641.0007.0000	SWPPP MANAGER	LS	ALL REQUIRED
641.0008.0000	SWPPP TRACK	CS	ALL REQUIRED
642.0001.0000	CONSTRUCTION SURVEYING	LS	ALL REQUIRED
642.0003.0000	THREE PERSON SURVEY PARTY	HR	40
642.2005.0000	CONTRACTOR-FURNISHED COMPUTATIONS	LS	ALL REQUIRED
642.2006.0000	CONTACTOR-FURNISHED ENGINEERING TOOLS	CS	ALL REQUIRED
643.0002.0000	TRAFFIC MAINTENANCE	LS	ALL REQUIRED
643.0003.0000	PERMANENT CONSTRUCTION SIGNS	LS	ALL REQUIRED
643.0023.0000	TRAFFIC PRICE ADJUSTMENT	CS	ALL REQUIRED
643.0025.0000	TRAFFIC CONTROL	CS	ALL REQUIRED
643.0032.0000	FLAGGING	CS	ALL REQUIRED

STATE OF ALASKA
PROFESSIONAL ENGINEER
PS&E REVIEW
AUGUST 2026

DOWL, LLC
5015 BUSINESS PARK BLVD
SUITE 4000
ANCHORAGE, AK 99503
(907) 562-2000
#AECL848 - AK

STATE OF ALASKA
DEPARTMENT OF TRANSPORTATION
AND PUBLIC FACILITIES

HERMON RD EXTENSION AND UPGRADE, PARKS HWY TO PALMER-WASILLA HWY

ESTIMATE OF QUANTITIES

NO.	DATE	REVISION

STATE	PROJECT DESIGNATION	YEAR	SHEET NO.	TOTAL SHEETS
ALASKA	0001729/CFHWY00799	2027	C2	C2

DESIGNED BY SRT
CHECKED BY KLK
DRAFTED BY JHK

SCALE N/A

DATE 8/7/2026 TIME 11:07 AM

DRAWING LOCATION
C:\DOWL_PW\D0433409\00799_C01_EST.DWG

ESTIMATE OF QUANTITIES

ITEM NO.	ITEM DESCRIPTION	PAY UNIT	QUANTITY
644.0001.0000	FIELD OFFICE	LS	ALL REQUIRED
644.2004.0000	ENGINEERING COMMUNICATIONS	CS	ALL REQUIRED
644.2007.0000	VEHICLE (LT/SUV)	EACH	2
645.0001.0000	TRAINING PROGRAM, 2 TRAINEES/APPRENTICES	LH	1,000
646.0001.0000	CPM SCHEDULING	LS	ALL REQUIRED
647.2000.0000	WIDE PAD DOZER, 65-HP MINIMUM	CS	ALL REQUIRED
647.2002.0000	BACKHOE, 4WD, 1 CY BUCKET, 75-HP MINIMUM, 15 FT DEPTH	CS	ALL REQUIRED
654.2002.0000	EAGLE MONITORING	CS	ALL REQUIRED
660.0001.0000	TRAFFIC SIGNAL SYSTEM COMPLETE, HERMON RD/PALMER-WASILLA HWY	LS	ALL REQUIRED
660.0003.0000	HIGHWAY LIGHTING SYSTEM COMPLETE, HERMON RD	LS	ALL REQUIRED
661.0002.0000	LOAD CENTER, 1A	EACH	1
662.2001.0000	SIGNAL INTERCONNECT, SYSTEM COMPLETE-FIBER	LS	ALL REQUIRED
670.2003.0000	MMA PAVEMENT MARKINGS, LONGITUDINAL SURFACE APPLIED	LF	3,720
670.2006.0000	MMA PAVEMENT MARKINGS, LONGITUDINAL INLAID	LF	21,228
670.2007.0000	MMA PAVEMENT MARKINGS, SYMBOLS AND ARROW(S) INLAID	EACH	15
670.2008.0000	MMA PAVEMENT MARKINGS, TRANSVERSE AND GORE INLAID	LF	5,184
682.2000.0000	VAC-TRUCK POTHOLE	CS	ALL REQUIRED

TABLE OF ESTIMATING FACTORS

ITEM NO.	ITEM DESCRIPTION	ESTIMATING FACTOR
203.0006.000A	BORROW, TYPE A	144 LB/CF
301.0001.00D1	AGGREGATE BASE COURSE, GRADING D-1	144 LB/CF
306.0001.0000	ATB	151 LB/CF
306.0002.5240	ASPHALT BINDER, GRADE PG 52-40 E	5.3% OF TOTAL WEIGHT OF 306.0001.0000
401.0001.002A	HMA, TYPE II; CLASS A	151 LB.CF
401.0004.5240	ASPHALT BINDER, GRADE PG 52-40 E	5.3% OF TOTAL WEIGHT OF 401.0001.002A
402.0001.STE1	STE-1 ASPHALT FOR TACK COAT	0.000334 TON/SY
608.2002.0000	ASPHALT PATHWAY	151 LB/CF
610.0002.0000	DITCH LINING	110 LB/CF
611.0002.0001	RIPRAP, CLASS I	108 LB/CF
618.0003.0000	WATER FOR SEEDING	1 GAL/SF

STATE OF ALASKA
PS&E REVIEW
AUGUST 2026
PROFESSIONAL ENGINEER

DOWL, LLC
5015 BUSINESS PARK BLVD
SUITE 4000
ANCHORAGE, AK 99503
(907) 562-2000
#AECL848 - AK

STATE OF ALASKA
DEPARTMENT OF TRANSPORTATION
AND PUBLIC FACILITIES

HERMON RD EXTENSION AND UPGRADE, PARKS HWY TO PALMER-WASILLA HWY

ESTIMATE OF QUANTITIES

NO.	DATE	REVISION

STATE	PROJECT DESIGNATION	YEAR	SHEET NO.	TOTAL SHEETS
ALASKA	0001729/CFHWY00799	2027	D1	D6

DESIGNED BY SRT
CHECKED BY KLK
DRAFTED BY JHK
SCALE
DATE 8/7/2026 TIME 11:07 AM
DRAWING LOCATION C:\DOWL_PW\D0433409\00799_D_SUMMARY.DWG

201.0003.0000 - CLEARING AND GRUBBING

SHEET	STATION FROM	STATION OFFSET	STATION TO	STATION OFFSET	AREA (ACRE)	REMARKS
F1	"HR" 11+60.00	LT/RT	"HR" 16+00.00	LT/RT	0.4	
F2	"HR" 16+00.00	LT/RT	"HR" 21+00.00	LT/RT	0.5	
F3	"HR" 21+00.00	LT/RT	"HR" 26+00.00	LT/RT	1.1	
F4	"HR" 26+00.00	LT/RT	"HR" 31+00.00	LT/RT	0.8	
F5	"HR" 31+00.00	LT/RT	"HR" 36+00.00	LT/RT	1.2	
F6	"HR" 36+00.00	LT/RT	"HR" 41+00.00	LT/RT	1.0	
F7	"HR" 41+00.00	LT/RT	"HR" 46+00.00	LT/RT	1.1	
F8	"HR" 46+00.00	LT/RT	"HR" 51+00.00	LT/RT	0.8	
F9	"HR" 51+00.00	LT/RT	"HR" 53+41.00	LT/RT	0.3	
F9–F10	"BS" 70+00.00	LT/RT	"BS" 71+75.00	LT/RT	0.1	
TOTAL:					7.4	ACRE
PAY ITEM QUANTITY:					8	ACRE

202.0001.0000 - REMOVAL OF STRUCTURES AND OBSTRUCTIONS

SHEET	STATION	OFFSET	QTY (EACH)	REMARKS
F6	''HR'' 40+05.02	60.6' LT	1	SHED
F7	''HR'' 41+29.87	31.6' LT	1	SHED
F7	''HR'' 41+93.52	20.9' RT	1	BUILDING
F7	''HR'' 42+26.79	4.0' RT	1	SHED
F7	''HR'' 43+31.85	48.0' RT	1	BUILDING
F8	''HR'' 46+35.40	44.9' LT	1	MOBILE HOME

202.0002.0000 - REMOVAL OF PAVEMENT

SHEET	STATION FROM	STATION OFFSET	STATION TO	STATION OFFSET	AREA (SY)	REMARKS
F1	"HR" 10+00.00	LT/RT	"HR" 16+00.00	LT/RT	3,113.4	
F2	"HR" 16+00.00	LT/RT	"HR" 21+00.00	LT/RT	2,779.3	
F3	"HR" 21+00.00	LT/RT	"HR" 26+00.00	LT/RT	1,791.4	
F4	"HR" 26+00.00	LT/RT	"HR" 31+00.00	LT/RT	1,584.0	
F9	"HR" 70+00.00	LT/RT	"HR" 71+75.00	LT/RT	372.2	
TOTAL:					9,640.4	SY
PAY ITEM QUANTITY:					9,650	SY

202.0003.0000 - REMOVAL OF SIDEWALK

SHEET	STATION FROM	STATION OFFSET	STATION TO	STATION OFFSET	AREA (SY)	REMARKS
F1	"HR" 11+61.02	45.4' RT	"HR" 11+75.21	22.2' RT	24.0	
F1	"HR" 11+79.28	69.1' LT	"HR" 11+85.61	40.6' LT	22.0	
TOTAL:					46.0	SY
PAY ITEM QUANTITY:					46	SY

202.0004.0000 - REMOVAL OF CULVERT PIPE

SHEET	STATION FROM	STATION OFFSET	STATION TO	STATION OFFSET	LENGTH (LF)	REMARKS
F1	"HR" 11+13.08	47.7' RT	"HR" 11+82.46	16.9' RT	75.9	
F2	"HR" 17+50.02	13.8' LT	"HR" 17+80.48	25.9' RT	50.0	
F3	"HR" 24+47.74	15.3' RT	"HR" 24+48.60	24.6' RT	39.9	
F7	"HR" 45+38.58	115.3' LT	"HR" 45+53.05	84.6' LT	33.9	
TOTAL:					199.7	LF
PAY ITEM QUANTITY:					200	LF

202.0007.0000 - REMOVAL OF JUNCTION BOX

SHEET	STATION	OFFSET	QTY (EACH)	REMARKS
F1	"HR" 11+16.82	33.2' RT	1	JUNCTION BOX, TYPE 1A, EJB1 LE1 DOT
F6	"HR" 37+22.64	55.1' LT	1	JUNCTION BOX, TYPE 1A, EJB1
TOTAL:			2	EACH
PAY ITEM QUANTITY:			2	EACH

202.0009.0000 - REMOVAL OF CURB AND GUTTER

SHEET	STATION FROM	STATION OFFSET	STATION TO	STATION OFFSET	LENGTH (LF)	REMARKS
F1	"HR" 11+53.56	80.6' RT	"HR" 13+87.61	14.1' RT	279.2	
F1	"HR" 11+80.81	88.4' LT	"HR" 13+18.11	15.8' LT	188.9	
F3	"HR" 21+36.73	33.7' LT	"HR" 21+40.05	187.9' LT	154.7	
F3	"HR" 21+67.80	187.5' LT	"HR" 21+69.32	33.9' LT	153.8	
TOTAL:					776.6	LF
PAY ITEM QUANTITY:					780	LF

202.2022.0000 - REMOVAL OF FENCE

SHEET	STATION FROM	STATION OFFSET	STATION TO	STATION OFFSET	LENGTH (LF)	REMARKS
F3	"HR" 21+70.91	41.6' RT	"HR" 25+08.42	66.2' RT	331.3	
F6	"HR" 37+07.84	77.3' LT	"HR" 37+24.82	18.6' RT	83.6	
F7	"HR" 41+39.33	165.4' LT	"HR" 41+51.72	146.6' LT	22.5	
F7	"HR" 43+15.22	91.3' RT	"HR" 43+90.72	63.7' RT	319.4	
TOTAL:					756.9	LF
PAY ITEM QUANTITY:					760	LF

STATE OF ALASKA
PS&E REVIEW
AUGUST 2026
PROFESSIONAL ENGINEER

DOWL, LLC
5015 BUSINESS PARK BLVD
SUITE 4000
ANCHORAGE, AK 99503
(907) 562-2000
#AECL848 – AK

STATE OF ALASKA
DEPARTMENT OF TRANSPORTATION
AND PUBLIC FACILITIES

HERMON RD EXTENSION AND UPGRADE, PARKS HWY TO PALMER–WASILLA HWY

SUMMARY TABLES

NO.	DATE	REVISION

STATE	PROJECT DESIGNATION	YEAR	SHEET NO.	TOTAL SHEETS
ALASKA	0001729/CFHWY00799	2027	D2	D6

DESIGNED BY SRT
CHECKED BY KLK
DRAFTED BY JHK
SCALE
DATE 8/7/2026 TIME 11:07 AM
DRAWING LOCATION C:\DOWL_PW\D0433409\00799_D_SUMMARY.DWG

202.2023.0000 - PAVEMENT PLANING

SHEET	STATION FROM	STATION OFFSET	STATION TO	STATION OFFSET	AREA (SY)	REMARKS
F9–F10	"HR" 53+21.52	LT/RT	"BS" 71+75.00	LT/RT	2,253.4	
				TOTAL:	2,253.4	SY
				PAY ITEM QUANTITY:	2,300	SY

203.0009.0000 - OBLITERATION OF ROADWAY

SHEET	STATION FROM	STATION OFFSET	STATION TO	STATION OFFSET	AREA (SY)	REMARKS
F1	"HR" 12+71.79	32.9' RT	"HR" 13+57.01	28.3' RT	27.2	
F1	"HR" 14+74.23	43.0' LT	"HR" 15+15.27	47.9' LT	30.7	
F1	"HR" 15+15.85	33.7' RT	"HR" 15+61.87	33.7' RT	27.1	
F7	"HR" 41+26.49	263.6' LT	"HR" 45+67.15	99.0' LT	859.3	
				TOTAL:	944.3	SY
				PAY ITEM QUANTITY:	950	SY

202.2038.0000 - SPECIAL DITCH

SHEET	ID	STATION	OFFSET	ELEVATION	LENGTH (LF)	DITCH TYPE	REMARKS
F4	D4–1	"HR" 28+49.01	178.8' LT	403.99	231	V–DITCH	BEGIN SPECIAL DITCH
		"HR" 28+48.56	160.8' LT	401.77			
		"HR" 28+56.36	77.2' LT	395.57			
		"HR" 28+86.09	50.0' LT	391.28			
		"HR" 28+91.37	50.0' LT	390.77			
		"HR" 29+70.61	50.0' LT	389.81			END SPECIAL DITCH
F4	D4–2	"HR" 28+70.00	24.3' RT	394.82	145.44	V–DITCH	BEGIN SPECIAL DITCH
		"HR" 29+62.15	36.0' RT	390.98			
		"HR" 29+82.35	35.6' RT	390.63			
		"HR" 29+97.78	39.6' RT	390.31			
		"HR" 30+09.05	50.8' RT	389.99			END SPECIAL DITCH
F4	D4–3	"HR" 30+09.05	50.8' RT	389.99	50.05	V–DITCH	END SPECIAL DITCH
		"HR" 30+12.91	63.1' RT	391.29			
		"HR" 30+16.05	100.0' RT	394.55			BEGIN SPECIAL DITCH
F4	D4–4	"HR" 30+42.13	100.0' RT	394.60	67.94	V–DITCH	BEGIN SPECIAL DITCH
		"HR" 30+48.51	59.4' RT	391.07			
		"HR" 30+53.44	47.0' RT	390.12			
		"HR" 30+63.25	38.0' RT	389.17			END SPECIAL DITCH
F5	D5–1	"HR" 32+20.00	47.5' LT	381.09	102.97	V–DITCH	BEGIN SPECIAL DITCH
		"HR" 32+80.00	62.0' LT	370.81			
		"HR" 33+01.13	83.3' LT	359.11			
		"HR" 33+11.06	87.9' LT	356.32			END SPECIAL DITCH
F5	D5–2	"HR" 32+50.25	31.9' RT	381.20	118.73	V–DITCH	BEGIN SPECIAL DITCH
		"HR" 32+65.00	38.0' RT	378.46			
		"HR" 33+00.00	70.0' RT	366.12			
		"HR" 33+25.00	83.0' RT	360.57			
		"HR" 33+51.71	89.0' RT	357.27			END SPECIAL DITCH
F6	D6–1	"HR" 36+80.00	45.0' LT	359.60	170.71	V–DITCH	BEGIN SPECIAL DITCH
		"HR" 37+25.00	48.5' LT	355.29			
		"HR" 37+60.00	52.0' LT	351.50			
		"HR" 38+20.00	56.0' LT	345.95			
		"HR" 38+50.00	60.0' LT	342.24			END SPECIAL DITCH

202.2038.0000 - SPECIAL DITCH (CONT.)

SHEET	ID	STATION	OFFSET	ELEVATION	LENGTH (LF)	DITCH TYPE	REMARKS
F6	D6–2	"HR" 38+00.16	29.0' RT	353.97	158.53	4FT FLAT BOTTOM	BEGIN SPECIAL DITCH
		"HR" 38+25.16	33.0' RT	351.17			
		"HR" 39+44.80	33.0' RT	345.69			
		"HR" 39+55.43	33.0' RT	345.61			
		"HR" 39+74.06	45.7' RT	344.80			
		"HR" 39+75.63	49.7' RT	345.35			END SPECIAL DITCH
F6	D6–3	"HR" 39+75.63	49.7' RT	345.35	22.45	V–DITCH	BEGIN SPECIAL DITCH
		"HR" 39+83.80	70.6' RT	348.25			END SPECIAL DITCH
F6	D6–4	"HR" 40+19.80	70.6' RT	348.08	24.92	V–DITCH	BEGIN SPECIAL DITCH
		"HR" 40+28.29	48.9' RT	345.20			
		"HR" 40+29.85	44.9' RT	344.67			
		"HR" 40+53.14	29.0' RT	344.52			END SPECIAL DITCH
F7	D7–1	"HR" 42+11.95	97.1' LT	341.59	49.87	V–DITCH	BEGIN SPECIAL DITCH
		"HR" 42+20.02	56.9' LT	341.17			
		"HR" 42+23.08	49.0' LT	340.65			END SPECIAL DITCH
F7	D7–2	"HR" 42+32.02	45.0' LT	340.04	236.02	4FT FLAT BOTTOM	BEGIN SPECIAL DITCH
		"HR" 42+74.35	45.0' LT	338.79			
		"HR" 42+90.24	45.0' LT	338.49			
		"HR" 43+15.24	51.0' LT	335.01			
		"HR" 43+90.09	51.0' LT	333.67			
		"HR" 45+25.00	63.2' LT	326.31			END SPECIAL DITCH
F7	D7–3	"HR" 43+74.72	29.0' RT	338.13	22.5	V–DITCH	BEGIN SPECIAL DITCH
		"HR" 43+88.17	34.2' RT	337.61			
		"HR" 43+95.04	46.8' RT	338.41			
		"HR" 44+04.83	76.9' RT	345.80			END SPECIAL DITCH
F7	D7–4	"HR" 44+18.54	76.8' RT	345.67	23.7	V–DITCH	BEGIN SPECIAL DITCH
		"HR" 44+46.45	35.2' RT	336.18			END SPECIAL DITCH
F7	D7–5	"HR" 44+46.45	35.2' RT	336.18	62.28	4FT FLAT BOTTOM	BEGIN SPECIAL DITCH
		"HR" 44+52.00	34.2' RT	335.38			
		"HR" 44+75.72	50.1' RT	329.99			
		"HR" 45+00.00	53.2' RT	328.80			END SPECIAL DITCH
F9	D9–1	"HR" 52+18.68	35.0' RT	333.14	64.3	4FT FLAT BOTTOM	BEGIN SPECIAL DITCH
		"HR" 52+74.10	42.2' RT	330.13			END SPECIAL DITCH
F9	D9–2	"HR" 52+74.10	42.2' RT	330.13	72.0	4FT FLAT BOTTOM	END SPECIAL DITCH
		"HR" 52+78.71	44.7' RT	330.16			
		"HR" 52+97.47	60.9' RT	330.28			
		"HR" 53+00.42	64.7' RT	330.31			
		"HR" 53+01.62	69.4' RT	330.33			
		"HR" 53+03.18	101.1' RT	330.49			BEGIN SPECIAL DITCH
				TOTAL:	1,623.3	LF	
				PAY ITEM QUANTITY:	1,650	LF	

STATE OF ALASKA
PS&E REVIEW
AUGUST 2026
PROFESSIONAL ENGINEER

DOWL, LLC
5015 BUSINESS PARK BLVD
SUITE 4000
ANCHORAGE, AK 99503
(907) 562-2000
#AECL848 – AK

STATE OF ALASKA
DEPARTMENT OF TRANSPORTATION
AND PUBLIC FACILITIES

HERMON RD EXTENSION AND UPGRADE, PARKS HWY TO PALMER–WASILLA HWY

SUMMARY TABLES

NO.	DATE	REVISION

STATE	PROJECT DESIGNATION	YEAR	SHEET NO.	TOTAL SHEETS
ALASKA	0001729/CFHWY00799	2027	D3	D6

DESIGNED BY SRT
CHECKED BY KLK
DRAFTED BY JHK
SCALE
DATE 8/7/2026 TIME 11:07 AM
DRAWING LOCATION C:\DOWL_PW\0043409\00799_D_SUMMARY.DWG

603.0001.0024, 603.0021.0018, 603.0021.0024, 603.2004.0036 CSP SUMMARY

603.0003.0024, 603.0003.0036 END SECTION FOR CSP SUMMARY

SHEET	PIPE ID	603.0001.0024 CSP 24 INCH	603.0021.0018 CPP 18 INCH	603.0021.0024 CPP 24 INCH	603.2004.0036 HDPE 36 INCH	INLET			OUTLET			GRADE (%)	603.0003.0024 CSP 24 INCH END SECTION	603.0003.0036 CSP 36 INCH END SECTION	REMARKS
		LENGTH (LF)	LENGTH (LF)	LENGTH (LF)	LENGTH (LF)	STA/STRUCT	OFFSET	INVERT	STA/STRUCT	OFFSET	INVERT		EACH	EACH	
F1	P1-1		90.5			S1-2		384.21	"HR" 11+12.69	48.2' RT	383.76	0.5			RIPRAP APRON
F1	P1-2		55.2			S1-4		384.60	S1-2		384.31	0.5			
F1	P1-3		11.0			S1-3		384.80	S1-4		384.70	1.0			
F2	P2-1		107.0			S2-1		386.80	S2-3		386.36	0.4			
F2	P2-2		50.0			S2-2		386.20	S2-3		386.00	0.4			
F2	P2-3		61.0			S2-3		385.90	"HR" 17+75.36	76.1' RT	385.65	0.4			DISSIPATOR IN EXISTING DITCH
F3	P3-1		48.0			S3-1		384.50	S3-2		384.20	0.6			
F3	P3-2		157.5			S3-2		384.00	S3-4		382.90	0.7			
F3	P3-3		48.0			S3-3		384.00	S3-4		383.70	0.6			
F3	P3-4		110.5			S3-4		383.60	S3-6		382.80	0.7			
F3	P3-5		48.0			S3-5		383.10	S3-6		382.70	0.8			
F3	P3-6			26.0		S3-6		382.40	"HR" 24+92.00	50.0' RT	382.47	0.5			ROCK FLUME TO RIPRAP APRON
F3	P3-7		179.0			S4-2		385.40	S3-6		382.70	1.5			
F3	P4-1		48.0			S4-1		386.00	S4-2		385.60	0.8			
F4	P4-2			69.0		"HR" 29+96.51	37.1' RT	390.51	"HR" 30+65.46	36.9' RT	388.88	2.4	2		BETWEEN DITCHES
F5	P5-1				158.0	"HR" 33+74.11	77.4' RT	357.00	"HR" 33+49.72	78.8' RT	355.15	1.2		2	BETWEEN DITCHES
F6	P6-1			55.0		"HR" 39+75.26	42.3' RT	344.91	"HR" 40+29.75	40.5' RT	344.64	0.5	2		
F7	P7-1	57.0				"HR" 43+90.57	36.0' RT	337.90	"HR" 44+47.25	35.1' RT	336.10	3.2	2		BETWEEN DITCHES
F9	P9-1				112.0	"HR" 52+74.10	36.3' RT	330.13	"HR" 52+81.98	72.7' LT	328.72	1.3		2	BETWEEN DITCHES
F10	P10-1			49.0		"HR" 906+42.00	60.0' LT	327.36	"HR" 906+91.00	58.0' LT	326.77	1.2	2		BETWEEN DITCHES
TOTAL:		57.0	1,039.7	198.0	270.0	LF							8	4	EACH
PAY ITEM QUANTITY:		57	1,050	198	270	LF							8	4	EACH

205.0004.0000 - POROUS BACKFILL MATERIAL

SHEET	STATION FROM	STATION OFFSET	STATION TO	STATION OFFSET	VOLUME (CY)	REMARKS
F6-F7	"HR" 40+50.00	62.1' LT	"HR" 41+16.00	72.7' LT	161.3	RETENTION FACILITY, SLOPED BOTTOM
F7	"HR" 41+16.00	78.0' LT	"HR" 41+39.70	73.5' LT	49.4	RETENTION FACILITY, FLAT BOTTOM
				TOTAL:	210.7	CY
				PAY ITEM QUANTITY:	211	CY

604.0004.0000 - ADJUST EXISTING MANHOLE

SHEET	STATION	OFFSET	QTY (EACH)	REMARKS
F2	"HR" 16+32.79	11.8' RT	1	SANITARY SEWER MANHOLE
F2	"HR" 18+75.11	12.3' RT	1	SANITARY SEWER MANHOLE
		TOTAL:	2	EACH
		PAY ITEM QUANTITY:	2	EACH

206.0001.0000 - FILTER BLANKET

SHEET	STATION FROM	STATION OFFSET	STATION TO	STATION OFFSET	VOLUME (CY)	REMARKS
F3	"HR" 24+92.00	50.0' RT	"HR" 24+92.00	115.9' RT	173.6	FLUME
				TOTAL:	173.6	CY
				PAY ITEM QUANTITY:	174	CY

604.0001.0001 - STORM SEWER MANHOLE, TYPE 1

SHEET	STATION	OFFSET	STRUCTURE ID	QTY (EACH)	REMARKS
F1	'HR' 11+99.50	22.3' RT	S1-2	1	CURB INLET
F1	'HR' 12+20.00	40.0' LT	S1-4	1	CURB INLET
F2	'HR' 17+86.15	24.0' LT	S2-3	1	CURB INLET
F2	'HR' 18+07.55	24.2' RT	S2-4	1	CURB INLET
F3	'HR' 22+24.00	24.0' RT	S3-2	1	CURB INLET
F3	'HR' 23+81.52	24.0' LT	S3-4	1	CURB INLET
F3	'HR' 24+92.00	24.0' LT	S3-5	1	CURB INLET
F3	'HR' 24+92.00	24.0' RT	S3-6	1	CURB INLET
F4	'HR' 26+71.00	24.0' RT	S4-2	1	CURB INLET
			TOTAL:	9	EACH
			PAY ITEM QUANTITY:	9	EACH

603.2017.0000 - CULVERT CLEANING

SHEET	STATION FROM	STATION OFFSET	STATION TO	STATION OFFSET	LENGTH (LF)	REMARKS
F9-F10	"HR" 53+01.08	101.5' RT	"HR" 53+04.40	167.1' RT	65.74	
				TOTAL:	65.7	LF
				PAY ITEM QUANTITY:	66	LF

STATE OF ALASKA
PS&E REVIEW
AUGUST 2026
PROFESSIONAL ENGINEER

DOWL, LLC
5015 BUSINESS PARK BLVD
SUITE 4000
ANCHORAGE, AK 99503
(907) 562-2000
#AECL848 - AK

STATE OF ALASKA
DEPARTMENT OF TRANSPORTATION
AND PUBLIC FACILITIES

HERMON RD EXTENSION AND UPGRADE, PARKS HWY TO PALMER-WASILLA HWY

SUMMARY TABLES

NO.	DATE	REVISION

STATE	PROJECT DESIGNATION	YEAR	SHEET NO.	TOTAL SHEETS
ALASKA	0001729/CFHWY00799	2027	D4	D6

DESIGNED BY SRT
CHECKED BY KLK
DRAFTED BY JHK
SCALE
DATE TIME 8/7/2026 11:08 AM
DRAWING LOCATION C:\DOWL_PW\0043409\00799_D_SUMMARY.DWG

604.0005.000A - INLET, TYPE A

SHEET	STATION	OFFSET	STRUCTURE ID	RIM ELEV	QTY (EACH)	REMARKS
F1	"HR" 12+20.00	40.0' LT	S1-3	389.22	1	FIELD INLET
F2	"HR" 17+00.43	24.0' RT	S2-1	391.4	1	CURB INLET
F3	"HR" 22+24.00	24.0' RT	S3-1	391.8	1	CURB INLET
F3	"HR" 23+81.52	24.0' LT	S3-3	389.3	1	CURB INLET
F4	"HR" 26+71.00	24.0' LT	S4-1	392.5	1	CURB INLET
				TOTAL:	5	EACH
				PAY ITEM QUANTITY:	5	EACH

607.0003.0000 - CHAIN LINK FENCE

SHEET	STATION				LENGTH (LF)	REMARKS
	FROM	OFFSET	TO	OFFSET		
F6-F7	"HR" 40+48.00	73.9' LT	"HR" 41+64.00	111.9' LT	130.49	
F7	"HR" 41+69.00	97.6' LT	"HR" 41+68.00	51.7' LT	45.2	
				TOTAL:	175.7	LF
				PAY ITEM QUANTITY:	176	LF

607.0005.0000 - DRIVE GATE

SHEET	STATION	OFFSET	HEIGHT (FT)	GATE OPENING	QUANTITY (EA)	REMARKS
F7	"HR" 41+64.00	111.9' LT	3' TO 5'	DOUBLE	1	BIORETENTION FACILITY ENTRANCE
				TOTAL:	1	EACH
				PAY ITEM QUANTITY:	1	EACH

608.0001.0004 - CONCRETE SIDEWALK, 4 INCHES THICK

SHEET	STATION				AREA (SY)	REMARKS
	FROM	OFFSET	TO	OFFSET		
F1	"HR" 11+81.40	88.3' LT	"HR" 13+90.17	30.0' LT	130.3	
				TOTAL:	130.3	SY
				PAY ITEM QUANTITY:	131	SY

608.0001.0006 - CONCRETE SIDEWALK, 6 INCHES THICK

SHEET	STATION				AREA (SY)	REMARKS
	FROM	OFFSET	TO	OFFSET		
F1	"HR" 13+85.22	35.2' LT	"HR" 13+95.22	35.0' LT	11.1	
F1	"HR" 14+29.22	35.0' LT	"HR" 14+39.22	35.0' LT	11.1	
F2	"HR" 17+27.82	35.0' LT	"HR" 17+37.82	35.0' LT	11.1	
F2	"HR" 17+71.82	35.0' LT	"HR" 17+81.82	35.0' LT	11.1	
				TOTAL:	44.4	SY
				PAY ITEM QUANTITY:	45	SY

608.0006.0000 - CURB RAMP

SHEET	STATION	OFFSET	TYPE	QTY (EACH)	REMARKS
G2	"HR" 11+65.40	40.5' RT	UNIDIRECTIONAL	1	DWT RADIUS = 38.0', CHORD LENGTH = 27.6'
G2	"HR" 11+83.50	44.9' LT	PARALLEL	1	
G3	"HR" 21+18.60	34.7' LT	PARALLEL	1	
G3	"HR" 21+78.00	34.7' LT	PARALLEL	1	
G4	"HR" 28+04.40	27.7' LT	UNIDIRECTIONAL	1	DWT RADIUS = 38.0', CHORD LENGTH = 27.6'
G6	"PW" 904+49.09	28.6' LT	SPECIAL	1	
G6	"PW" 904+49.11	32.5' RT	SPECIAL	1	
G6	"PW" 904+57.19	38.0' RT	SPECIAL	1	
G6	"PW" 904+67.61	46.2' LT	SPECIAL	1	
G7	"PW" 905+35.09	38.4' RT	SPECIAL	1	
G7	"PW" 905+39.81	46.4' LT	SPECIAL	1	
G7	"PW" 905+50.51	33.4' LT	SPECIAL	1	
G7	"PW" 905+50.51	30.6' RT	SPECIAL	1	
			TOTAL:	13	EACH
			PAY ITEM QUANTITY:	13	EACH

608.2002.0000 - ASPHALT PATHWAY

SHEET	STATION				WEIGHT (TON)	REMARKS
	FROM	OFFSET	TO	OFFSET		
F1	"HR" 13+90.17	LT	"HR" 16+00.00	LT	22.1	
F2	"HR" 16+00.00	LT	"HR" 21+00.00	LT	56.1	
F3	"HR" 21+00.00	LT	"HR" 26+00.00	LT	67.6	
F4	"HR" 26+00.00	LT	"HR" 31+00.00	LT	51.5	
F5	"HR" 31+00.00	LT	"HR" 36+00.00	LT	63.0	
F6	"HR" 36+00.00	LT	"HR" 41+00.00	LT	62.9	
F7	"HR" 41+00.00	LT	"HR" 46+00.00	LT	55.5	
F8	"HR" 46+00.00	LT	"HR" 51+00.00	LT	62.9	
F8-F9	"HR" 51+00.00	LT	"HR" 53+19.22	LT	25.6	
F9-F10	"PW" 905+53.02	RT	"PW" 906+11.07	RT	7.7	
F9	"PW" 903+94.86	RT	"PW" 904+46.61	RT	6.3	
				TOTAL:	481.2	TON
				PAY ITEM QUANTITY:	482	TON

608.2017.0000 - DETECTABLE WARNING TILE

SHEET	STATION	OFFSET	QTY (EACH)	REMARKS
F4	"HR" 28+73.43	32.9' LT	1	
F7	"HR" 41+66.85	24.9' LT	1	
F7	"HR" 42+39.55	24.2' LT	1	
		TOTAL:	3	EACH
		PAY ITEM QUANTITY:	3	EACH

STATE OF ALASKA
PROFESSIONAL ENGINEER
PS&E REVIEW
AUGUST 2026

DOWL, LLC
5015 BUSINESS PARK BLVD
SUITE 4000
ANCHORAGE, AK 99503
(907) 562-2000
#AECL848 - AK

STATE OF ALASKA
DEPARTMENT OF TRANSPORTATION
AND PUBLIC FACILITIES

HERMON RD EXTENSION AND UPGRADE, PARKS HWY TO PALMER-WASILLA HWY

SUMMARY TABLES

NO.	DATE	REVISION

STATE	PROJECT DESIGNATION	YEAR	SHEET NO.	TOTAL SHEETS
ALASKA	0001729/CFHWY00799	2027	D5	D6

DESIGNED BY SRT
CHECKED BY KLK
DRAFTED BY JHK
SCALE
DATE 8/7/2026 TIME 11:08 AM
DRAWING LOCATION C:\DOWL_PW\0043409\00799_D_SUMMARY.DWG

609.0002.0001 - CURB AND GUTTER, TYPE 1

SHEET	STATION FROM	STATION OFFSET	STATION TO	STATION OFFSET	LENGTH (LF)	REMARKS
F1	"HR" 11+80.65	88.4' LT	"HR" 16+00.00	24.3' LT	464.1	
F2	"HR" 16+00.00	24.3' LT	"HR" 21+00.00	25.5' LT	500.1	
F3	"HR" 21+00.00	25.5' LT	"HR" 26+00.00	24.3' LT	858.4	
F4	"HR" 26+00.00	24.3' LT	"HR" 28+25.87	81.7' LT	270.8	
F1	"HR" 11+53.43	80.6' RT	"HR" 16+00.00	24.3' RT	525.9	
F2	"HR" 16+00.00	24.3' RT	"HR" 21+00.00	24.3' RT	545.2	
F3	"HR" 21+00.00	24.3' RT	"HR" 26+00.00	24.3' RT	500.0	
F4	"HR" 26+00.00	24.3' RT	"HR" 28+70.00	26.3' RT	270.2	
F9	"PW" 905+34.77	70.1' LT	"PW" 905+84.51	23.3' LT	81.1	PALMER-WASILLA HIGHWAY INTX
F9	"PW" 904+74.14	61.7' LT	"PW" 904+31.72	23.7' LT	64.2	PALMER-WASILLA HIGHWAY INTX
F9	"PW" 904+27.32	30.6' RT	"PW" 904+73.46	64.3' RT	67.5	PALMER-WASILLA HIGHWAY INTX
F9	"PW" 905+19.23	61.7' RT	"PW" 905+72.39	30.9' RT	71.8	PALMER-WASILLA HIGHWAY INTX
				TOTAL:	4,219.3	LF
				PAY ITEM QUANTITY:	4,250	LF

610.0002.0000 - DITCH LINING

SHEET	STATION FROM	STATION OFFSET	STATION TO	STATION OFFSET	WEIGHT (TON)	REMARKS
F4	"HR" 28+49.01	178.8' LT	"HR" 28+86.09	50.0' LT	64.6	
F5	"HR" 32+19.96	49.4' LT	"HR" 33+51.07	88.2' RT	50.2	
F5	"HR" 32+50.25	31.9' RT	"HR" 33+51.13	89.0' RT	72.6	
F6	"HR" 36+89.99	45.9' LT	"HR" 38+50.04	60.0' LT	25.8	
F6	"HR" 37+74.92	29.0' RT	"HR" 38+59.65	33.0' RT	71.9	
F7	"HR" 42+89.77	47.0' LT	"HR" 45+07.33	63.5' LT	4.8	
F7	"HR" 44+46.33	35.2' RT	"HR" 44+74.78	51.4' RT	11.0	
				TOTAL:	300.8	TON
				PAY ITEM QUANTITY:	301	TON

611.0001.0001 - RIPRAP CLASS I

SHEET	STATION	OFFSET	DEPTH (FT)	QTY (CY)	REMARKS
F1	"HR" 11+12.69	48.2' RT	2	4.7	RIPRAP APRON
F2	"HR" 17+75.36	76.1' RT	2	4.7	ENERGY DISSIPATOR
F3	"HR" 24+92.00	50.0' RT	2	22.6	ROCK FLUME
F3	"HR" 24+92.00	115.9' RT	2	3.7	ENERGY DISSIPATOR
			TOTAL:	39.2	EACH
			PAY ITEM QUANTITY:	40	EACH

627.0006.0000 - FIRE HYDRANT RELOCATION

SHEET	STATION FROM	STATION OFFSET	STATION TO	STATION OFFSET	EACH (QTY)	REMARKS
F1	"HR" 12+13.05	21.5' RT	"HR" 12+13.00	36.5' RT	1	
				TOTAL:	1	EACH
				PAY ITEM QUANTITY:	1	EACH

618.0001.0000 - SEEDING

SHEET	STATION FROM	STATION OFFSET	STATION TO	STATION OFFSET	AREA (ACRE)	REMARKS
F1	"HR" 11+60.00	LT/RT	"HR" 16+00.00	LT/RT	0.1	
F2	"HR" 16+00.00	LT/RT	"HR" 21+00.00	LT/RT	0.1	
F3	"HR" 21+00.00	LT/RT	"HR" 26+00.00	LT/RT	0.6	
F4	"HR" 26+00.00	LT/RT	"HR" 31+00.00	LT/RT	0.4	
F5	"HR" 31+00.00	LT/RT	"HR" 36+00.00	LT/RT	1.0	
F6	"HR" 36+00.00	LT/RT	"HR" 41+00.00	LT/RT	0.8	
F7	"HR" 41+00.00	LT/RT	"HR" 46+00.00	LT/RT	1.0	
F8	"HR" 46+00.00	LT/RT	"HR" 51+00.00	LT/RT	0.7	
F8-F9	"HR" 51+00.00	LT/RT	"HR" 53+41.00	LT/RT	0.3	
F9-F10	"BS" 70+00.00	LT/RT	"BS" 71+75.00	LT/RT	0.1	
				TOTAL:	5.1	ACRE
				PAY ITEM QUANTITY:	5.1	ACRE

620.0001.0000 - TOPSOIL

SHEET	STATION FROM	STATION OFFSET	STATION TO	STATION OFFSET	AREA (SY)	REMARKS
F1	"HR" 11+60.00	LT/RT	"HR" 16+00.00	LT/RT	412.0	
F2	"HR" 16+00.00	LT/RT	"HR" 21+00.00	LT/RT	572.3	
F3	"HR" 21+00.00	LT/RT	"HR" 26+00.00	LT/RT	2,070.9	
F4	"HR" 26+00.00	LT/RT	"HR" 31+00.00	LT/RT	3,109.4	
F5	"HR" 31+00.00	LT/RT	"HR" 36+00.00	LT/RT	5,299.6	
F6	"HR" 36+00.00	LT/RT	"HR" 41+00.00	LT/RT	3,520.3	
F7	"HR" 41+00.00	LT/RT	"HR" 46+00.00	LT/RT	4,758.7	
F8	"HR" 46+00.00	LT/RT	"HR" 51+00.00	LT/RT	3,149.4	
F8-F9	"HR" 51+00.00	LT/RT	"HR" 53+41.00	LT/RT	1,386.8	
F9-F10	"BS" 70+00.00	LT/RT	"BS" 71+75.00	LT/RT	342.2	
				TOTAL:	24,621.6	SY
				PAY ITEM QUANTITY:	24,700	SY

627.0010.0000 - ADJUSTMENT OF VALVE BOX

SHEET	STATION	OFFSET	QTY (EACH)	REMARKS
F1	"HR" 11+44.34	48.8' RT	1	
F5	"HR" 31+90.58	114.07' RT	1	
		TOTAL:	2	EACH
		PAY ITEM QUANTITY:	2	EACH

STATE OF ALASKA
PS&E REVIEW
AUGUST 2026
PROFESSIONAL ENGINEER

DOWL, LLC
5015 BUSINESS PARK BLVD
SUITE 4000
ANCHORAGE, AK 99503
(907) 562-2000
#AECL848 - AK

STATE OF ALASKA
DEPARTMENT OF TRANSPORTATION
AND PUBLIC FACILITIES

HERMON RD EXTENSION AND UPGRADE, PARKS HWY TO PALMER-WASILLA HWY

SUMMARY TABLES

NO.	DATE	REVISION

STATE	PROJECT DESIGNATION	YEAR	SHEET NO.	TOTAL SHEETS
ALASKA	0001729/CFHWY00799	2027	D6	D6

631.0001.0002 - GEOTEXTILE, DRAINAGE, CLASS 2

SHEET	STATION				AREA (SY)	REMARKS
	FROM	OFFSET	TO	OFFSET		
F1	"HR" 11+12.70	48.2' RT	–	–	8.75	RIPRAP APRON
F2	"HR" 17+75.36	76.1' RT	–	–	8.8	ENERGY DISSIPATOR
F3	"HR" 24+92.00	50.0' RT	–	–	45.7	ROCK FLUME
F3	"HR" 24+92.00	115.9' RT	–	–	6.9	ENERGY DISSIPATOR
F4	"HR" 28+49.01	178.8' LT	"HR" 28+86.09	50.0' LT	163.1	
F5	"HR" 32+19.96	49.4' LT	"HR" 33+51.07	88.2' RT	126.7	
F5	"HR" 32+50.25	31.9' RT	"HR" 33+51.13	89.0' RT	183.3	
F6	"HR" 36+89.99	45.9' LT	"HR" 38+50.04	60.0' LT	65.1	
F6	"HR" 37+74.92	29.0' RT	"HR" 38+59.65	33.0' RT	181.5	
F7	"HR" 42+89.77	47.0' LT	"HR" 45+07.33	63.5' LT	12.1	
F7	"HR" 44+46.33	35.2' RT	"HR" 44+74.78	51.4' RT	27.8	
				TOTAL:	829.6	SY
				PAY ITEM QUANTITY:	830	SY

639.2000.0000 - APPROACH

SHEET	STATION		SKEW ANGLE (90° TYP.)	TYPE			RADIUS (LF)	WIDTH (LF)	LENGTH (LF)	REMARKS
	FROM	OFFSET		PUB.	RES.	COM.				
F1	"HR" 11+40.35	RT	–	X			45	24/MTE	57.48	E. SUN MOUNTAIN AVE
F1	"HR" 11+64.25	CL	N/A	X			40/40	49.5	41.9	HERMON ROAD/SUN MOUNTAIN INTX
F1	"HR" 14+12.22	LT	–			X	–	34.0	87.1	ALLEN & PETERSON DRIVEWAY
F1	"HR" 14+10.06	RT	–	X			40/40	23.0	100.0	MOUNTIN VILLAGE DRIVE
F2	"HR" 16+21.00	RT	–			X	–	34.0	50.0	DRIVEWAY CURB CUT
F2	"HR" 17+54.38	RT	90.2	X			40/40	19.8	100.0	EAST QUIET CIRCLE
F2	"HR" 17+54.82	LT	–			X	–	34.0	73.5	DRIVEWAY CURB CUT
F3	"HR" 21+54.30	LT	–	X			40/40	24.7	239.0	EAST TYSONS TRAIL
F3	"HR" 21+60.03	RT	–		X		–	14.0	50.4	DRIVEWAY CURB CUT
F4	"HR" 27+30.40	RT	–		X		–	14.0	90.0	DRIVEWAY CURB CUT
F4	"HR" 28+47.55	LT	95.4	X			40/40	22.0	182.0	SOUTH MANEY DRIVE
F4	"HR" 30+31.09	RT	–	X			40/40	21.4	100.0	EAST WHISPERING WOODS DRIVE
F4	"HR" 30+31.09	146.27' RT	–		X		20/20	20.0	183.3	NEW DRIVEWAY
F6	"HR" 36+97.65	RT	91.81	X			45	17.9	100.0	EAST ZAK CIRCLE
F6	"HR" 40+01.80	RT	–	X			40/40	34.0	70.6	
F7	"HR" 41+44.75	206.30' LT	–			X	10/10	24.0	26.2	
F7	"HR" 42+03.03	LT	–	X			40/40	24.0	291.8	SOUTH ADELE CIRCLE
F7	"HR" 44+16.84	RT	–		X		40/40	28.8	77.1	
F9	"HR" 53+41.40	CL	N/A	X			40/50	62.5	61.6	HERMON ROAD/PALMER WASILLA HIGHWAY INTX
F9–F10	"HR" 53+41.40	RT	–	X			40/40	47.9	205.0	HERMON ROAD/PALMER WASILLA HIGHWAY INTX
F9–F10	"HR" 53+41.40	LT	–	X			40/40	48.2	218.0	HERMON ROAD/PALMER WASILLA HIGHWAY INTX
F9	"PW" 905+00.00	RT	–	X			40/40	36.0	170.7	NORTH BETTS STREET
			TOTAL:	14	4	4	EACH			
			PAY ITEM QUANTITY:	22			EACH			

DESIGNED BY SRT
CHECKED BY KLK
DRAFTED BY JHK
SCALE
DATE 8/7/2026 TIME 11:08 AM
DRAWING LOCATION C:\DOWL_PW\D0433409\00799_D_SUMMARY.DWG



DOWL, LLC
5015 BUSINESS PARK BLVD
SUITE 4000
ANCHORAGE, AK 99503
(907) 562-2000
#AECL848 – AK

STATE OF ALASKA
DEPARTMENT OF TRANSPORTATION
AND PUBLIC FACILITIES

HERMON RD EXTENSION AND UPGRADE, PARKS HWY TO PALMER–WASILLA HWY

SUMMARY TABLES

NO.	DATE	REVISION

STATE	PROJECT DESIGNATION	YEAR	SHEET NO.	TOTAL SHEETS
ALASKA	0001729/CFHWY00799	2027	E1	E8

NOTES:

1. SEE APPROACH SUMMARY ON SHEET D FOR APPROACH STATION, LENGTH, WIDTH, SKEW ANGLE, AND TYPE.
2. UNLESS OTHERWISE INDICATED, PAVE TO FURTHEST RADIUS RETURN OR 10' BEHIND PATHWAY, WHICHEVER IS GREATER.
3. VERTICAL CURVE REQUIREMENTS:
   CREST – 2 ½ INCH MAXIMUM IN A 10 FOOT CHORD
   SAG – 2 INCH MAXIMUM IN A 10 FOOT CHORD
4. WHEN PATHWAY IS PRESENT, MAXIMUM LANDING GRADE IS TO BE ±1.8%, BUT NOT MORE THAN 2.0% MAXIMUM PER ADA.
5. ACCESS GRADE MAX. 15%
6. FOR APPROACHES WARP FORESLOPE TO MATCH THE THROUGH ROADWAY FORESLOPE WITHIN HALF THE LENGTH OF THE RETURN RADIUS. FOR DRIVEWAYS AND WHERE PATHWAY IS NOT PRESENT WARP FORESLOPE TO THE FULL LENGTH OF THE RETURN RADIUS OR 24' FROM EDGE OF TRAVELED WAY EXTENDED, WHICHEVER IS LESS. ADJUST AS DIRECTED BY THE ENGINEER.

RADIUS TABLE	
TYPE	RADIUS**
RESIDENTIAL	20'
PUBLIC/COMMERCIAL	40'

LANDING TABLE	
TYPE	LENGTH**
RESIDENTIAL	10'
PUBLIC/COMMERCIAL	30'

** UNLESS SHOWN OTHERWISE

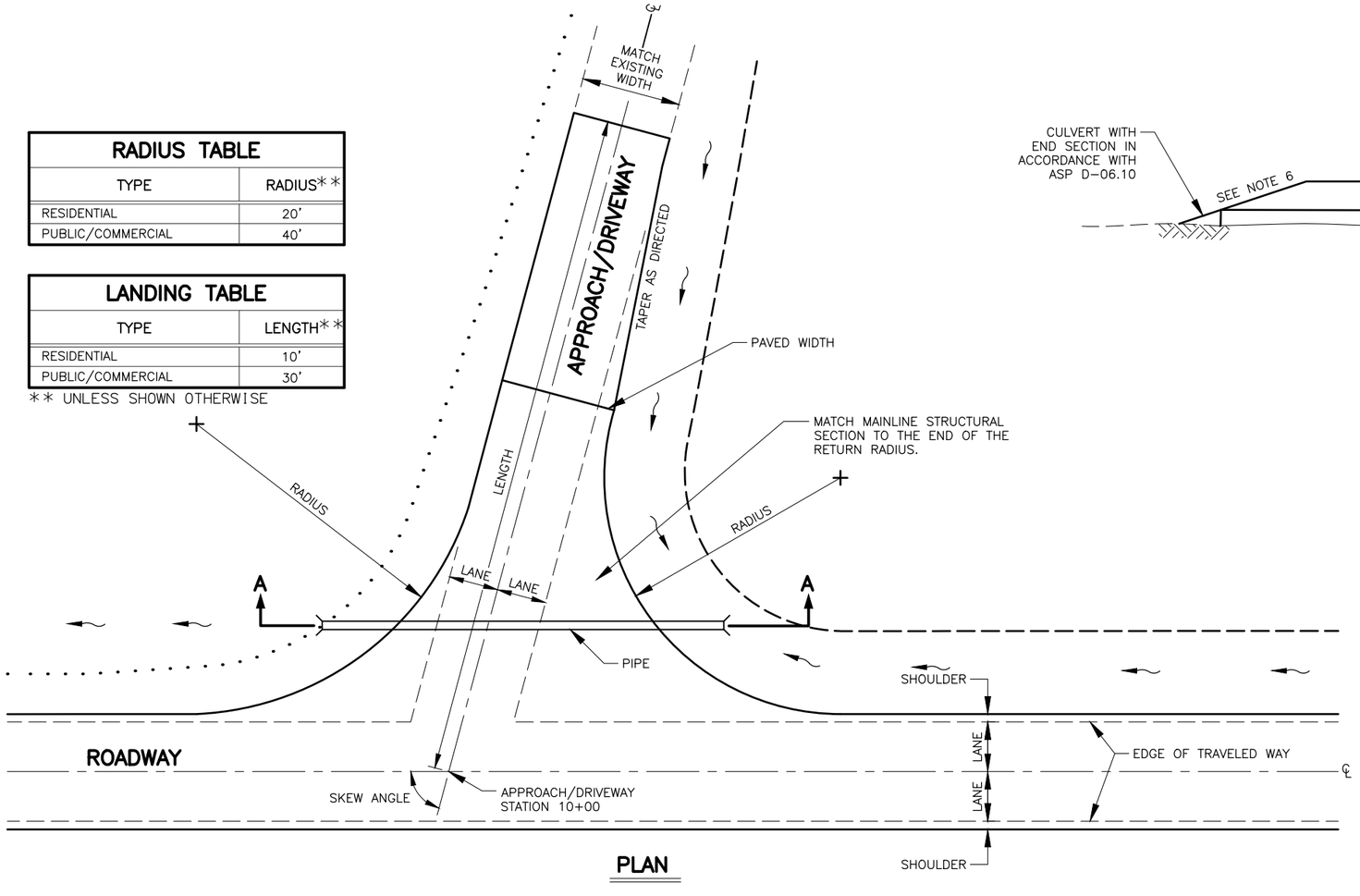

PLAN

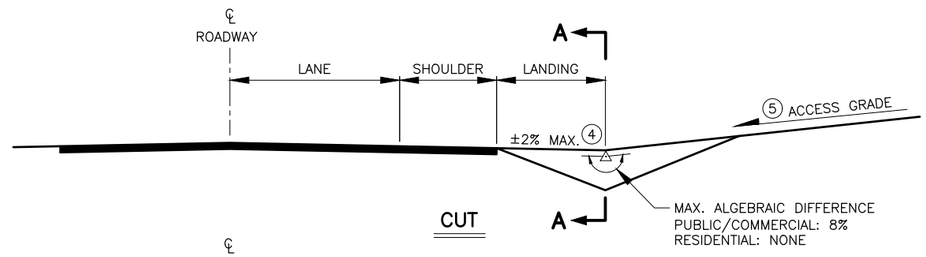

CUT

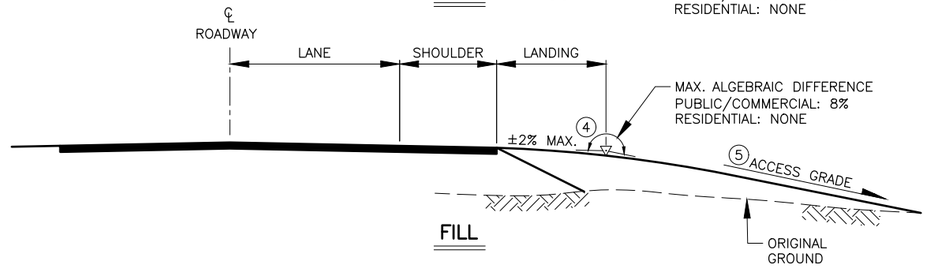

FILL

PROFILES

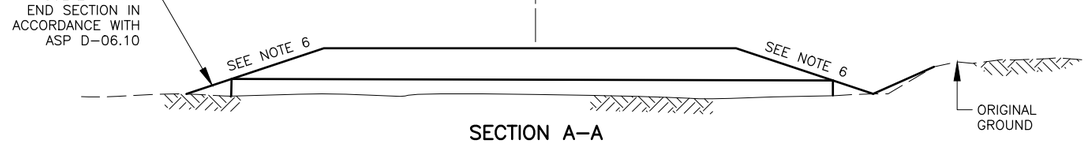

SECTION A–A

TYPICAL

DESIGNED BY SRT
CHECKED BY KLK
DRAFTED BY JHK

SCALE AS SHOWN

DATE 8/7/2026 TIME 11:08 AM

DRAWING LOCATION
C:\DOWL_PW\00433398\00799_E01_DTL.DWG

PS&E REVIEW AUGUST 2026

DOWL, LLC
5015 BUSINESS PARK BLVD
SUITE 4000
ANCHORAGE, AK 99503
(907) 562–2000
#AECL848 – AK

STATE OF ALASKA
DEPARTMENT OF TRANSPORTATION
AND PUBLIC FACILITIES

HERMON RD EXTENSION AND UPGRADE, PARKS HWY TO PALMER–WASILLA HWY

UNCURBED APPROACH DETAILS

NO.	DATE	REVISION

STATE	PROJECT DESIGNATION	YEAR	SHEET NO.	TOTAL SHEETS
ALASKA	0001729/CFHWY00799	2027	E2	E8

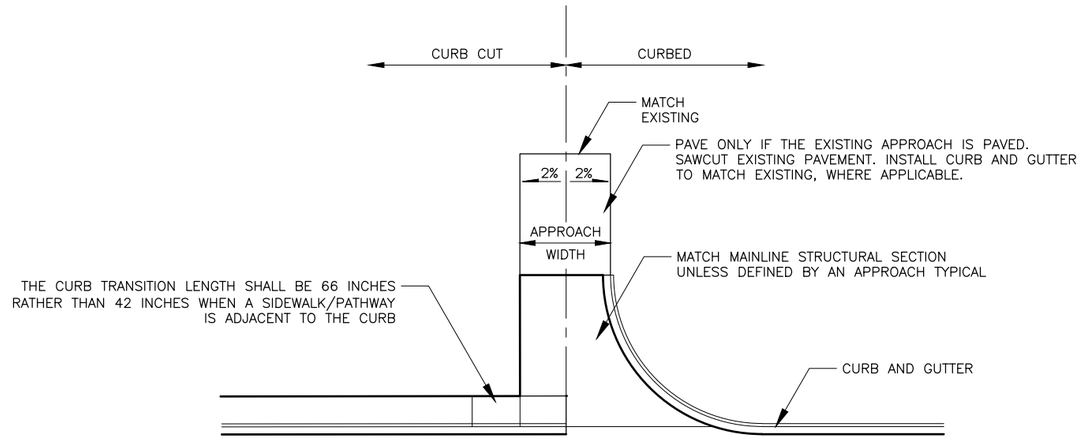

PLAN

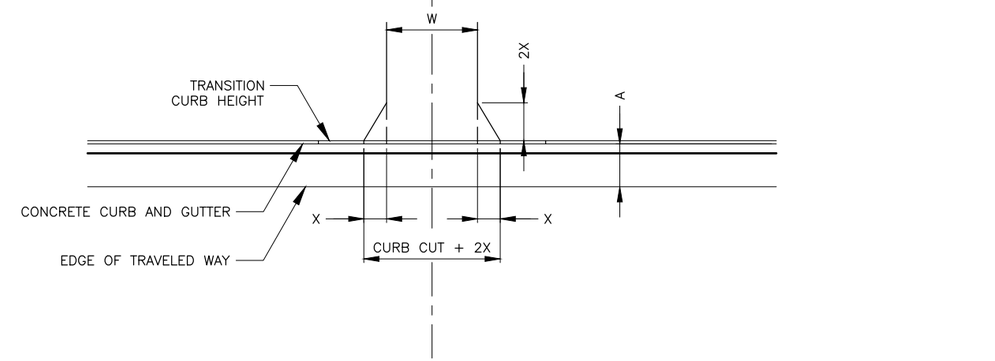

WITHOUT SIDEWALK

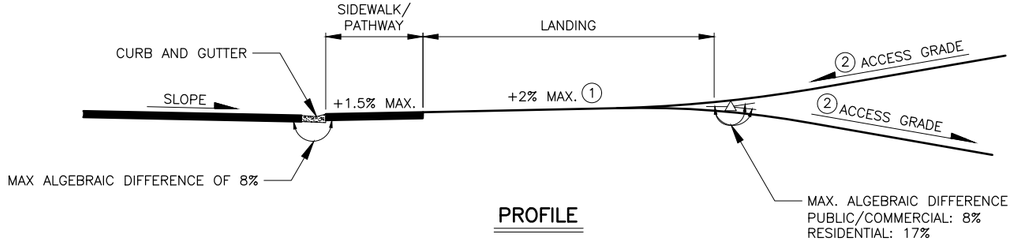

PROFILE

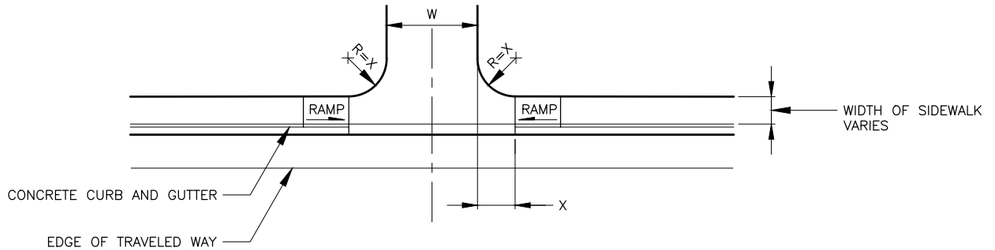

WITH SIDEWALK

CURBED APPROACH

CURBED APPROACH NOTES:

1. SEE APPROACH SUMMARY FOR APPROACH STATION, LENGTH, WIDTH, SKEW ANGLE, AND TYPE.
2. APPROACH VERTICAL CURVE REQUIREMENTS:
   CREST – 2 ½ INCH MAXIMUM IN A 10 FOOT CHORD
   SAG – 2 INCH MAXIMUM IN A 10 FOOT CHORD

(1) WHEN PATHWAY IS PRESENT, MAXIMUM LANDING GRADE IS TO BE +1.5%.

(2) ACCESS GRADE MAX. 15%

CURB CUT WIDENING

ASPHALT PATHWAY NOTES:

1. W = WIDTH OF APPROACH, A = WIDTH OF SHOULDER
2. X = 3' WHEN A > 4' AND X = 5' WHEN A ≤ 4'

STATE OF ALASKA
PS&E REVIEW
AUGUST 2026
PROFESSIONAL ENGINEER

DOWL, LLC
5015 BUSINESS PARK BLVD
SUITE 4000
ANCHORAGE, AK 99503
(907) 562–2000
#AECL848 – AK

STATE OF ALASKA
DEPARTMENT OF TRANSPORTATION
AND PUBLIC FACILITIES

HERMON RD EXTENSION AND UPGRADE, PARKS HWY TO PALMER–WASILLA HWY

CURBED APPROACH, AND CURB CUT WIDENING DETAILS

DESIGNED BY SRT
CHECKED BY KLK
DRAFTED BY JHK

SCALE AS SHOWN

DATE TIME 8/7/2026 11:08 AM

DRAWING LOCATION
C:\DOWL_PW\D0433398\00799_E01_DTL.DWG

NO.	DATE	REVISION	STATE	PROJECT DESIGNATION	YEAR	SHEET NO.	TOTAL SHEETS
			ALASKA	0001729/CFHWY00799	2027	E3	E8

DESIGNED BY SRT
CHECKED BY KLK
DRAFTED BY JHK
SCALE AS SHOWN
DATE TIME 8/7/2026 11:08 AM
DRAWING LOCATION C:_DOWL_PW\D0433398\00799_E01_DTL.DWG

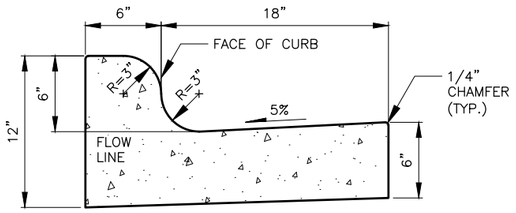

6" MOUNTABLE CURB & GUTTER

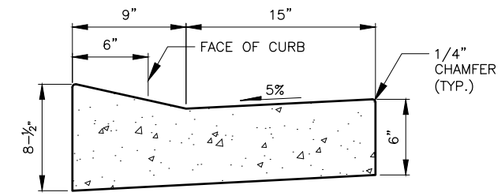

DEPRESSED CURB & GUTTER (CURB CUT)

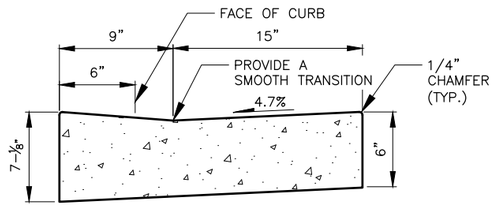

ADA CURB & GUTTER

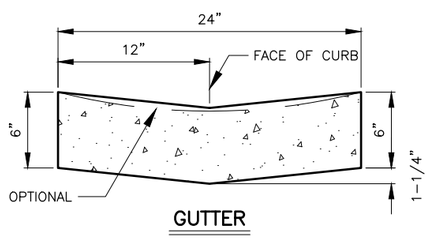

GUTTER

CURBS

CURB NOTES:

1. MOUNTABLE, DEPRESSED, ROLLED, AND EXPRESSWAY GUTTER PANS SHALL MATCH THE ROADWAY CROSS SLOPE IN THE HIGH SIDE OF SUPER ELEVATED AREAS.
2. USE THE ADA RAMP CURB & GUTTER FOR ALL CURB RAMPS.

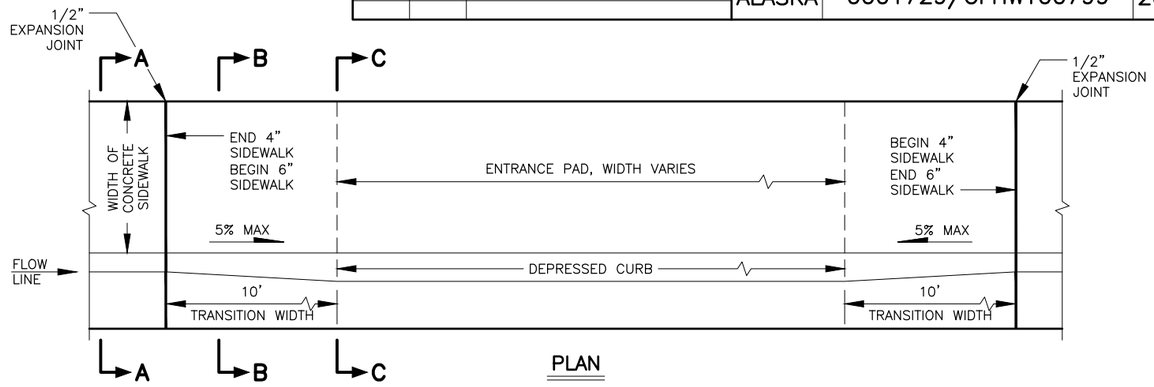

PLAN

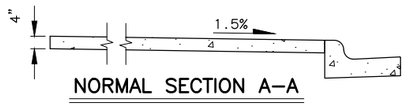

NORMAL SECTION A–A

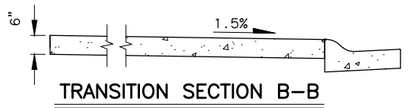

TRANSITION SECTION B–B

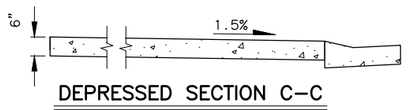

DEPRESSED SECTION C–C

CURB CUT NOTES:

1. TRANSITION WIDTH IS SHOWN FOR 6 INCH HIGH CURB & GUTTER.
2. WHERE THE SIDEWALK SLOPE MAKES IT NECESSARY TO LENGTHEN A RAMP RUN TO AVOID EXCEEDING THE ALLOWABLE RAMP SLOPE, DO NOT EXCEED A RAMP LENGTH OF 15 FEET. THE SLOPE RESULTING FROM THAT RUN LENGTH IS ACCEPTABLE, EVEN IF IT EXCEEDS THE MAXIMUM SLOPE SHOWN.
3. CONSTRUCT RAMP RUNS AND LANDINGS OF CONCRETE WHEN CONCRETE SIDEWALK IS PRESENT.
4. PROVIDE A BROOMED FINISH ON CONCRETE RAMP RUNS PERPENDICULAR TO THE RAMP SLOPE.

VEHICULAR CURB CUT

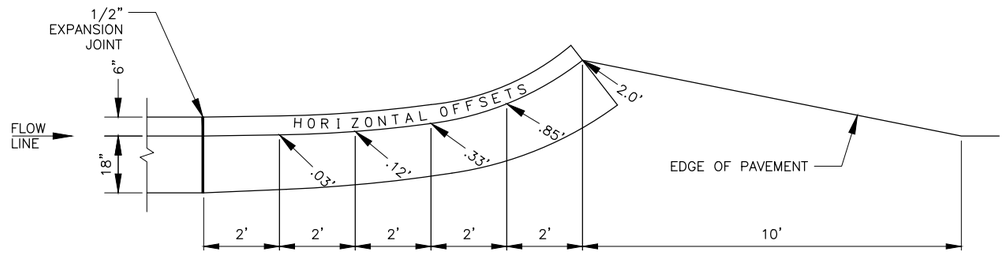

PLAN

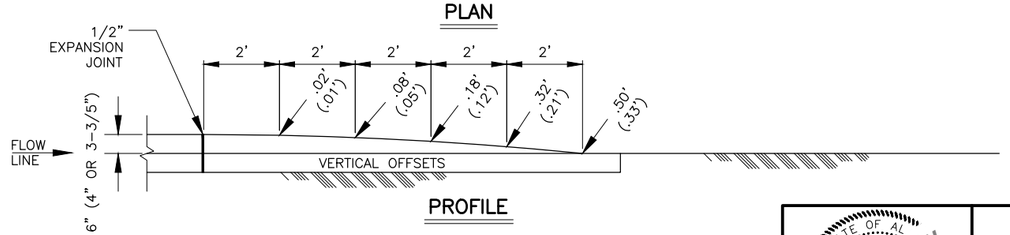

PROFILE

CURB & GUTTER TERMINATION TRANSITIONS

TERMINATION NOTES:

1. NUMBERS IN PARENTHESIS ARE FOR 4 INCH MOUNTABLE AND LOW PROFILE CURB & GUTTER.

STATE OF ALASKA
PS&E REVIEW
AUGUST 2026
PROFESSIONAL ENGINEER

DOWL, LLC
5015 BUSINESS PARK BLVD
SUITE 4000
ANCHORAGE, AK 99503
(907) 562-2000
#AECL848 – AK

STATE OF ALASKA
DEPARTMENT OF TRANSPORTATION
AND PUBLIC FACILITIES

HERMON RD EXTENSION AND UPGRADE, PARKS HWY TO PALMER–WASILLA HWY

CURB & GUTTER DETAILS

NO.	DATE	REVISION

STATE	PROJECT DESIGNATION	YEAR	SHEET NO.	TOTAL SHEETS
ALASKA	0001729/CFHWY00799	2027	E4	E8

DESIGNED BY SRT
CHECKED BY KUK
DRAFTED BY AHK

SCALE AS SHOWN

DATE TIME 8/7/2026 11:08 AM

DRAWING LOCATION C:\DOWL_PW\0043398\00799_E01_DTL.DWG

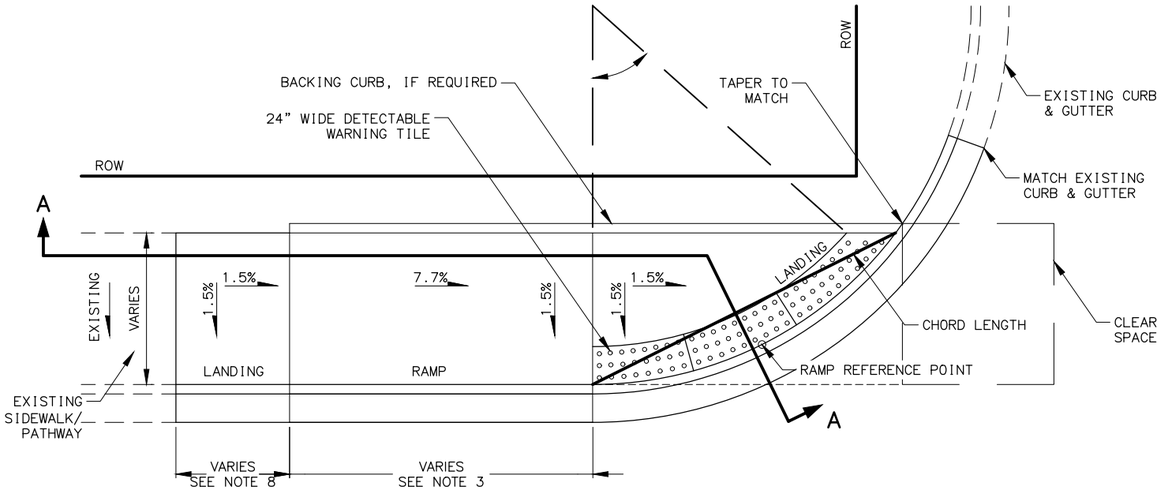

WIDE SIDEWALK DIRECTIONAL RAMP

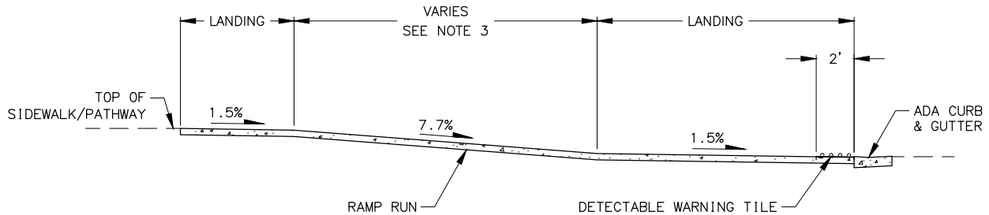

SECTION A–A

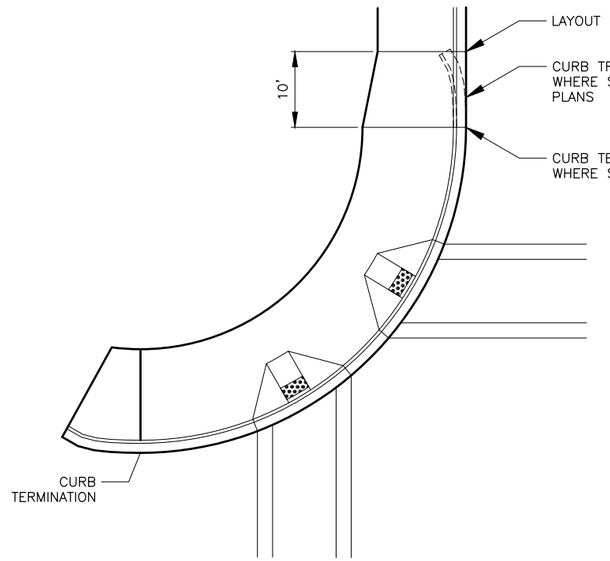

LOW PROFILE CURB AND GUTTER CURB RAMP LAYOUT

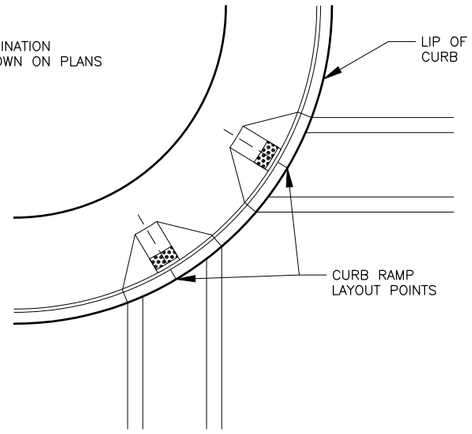

TYPICAL PERPENDICULAR CURB RAMP

CURB RAMPS

CURB RAMP CONSTRUCTION NOTES:

1. SEE PLANS FOR RAMP TYPE AT SPECIFIC LOCATION. SEE STRIPING PLANS FOR CROSSWALK LAYOUT.
2. CONSTRUCT RAMP RUNS AND LANDINGS OF 4" THICK (MIN.) CONCRETE, REGARDLESS OF WHETHER THE SIDEWALK IS ASPHALT OR CONCRETE.
3. CONSTRUCT RAMP SLOPES AT 7.7% (5.0% MIN. AND 8.3% MAX.). IF SITE CONDITIONS WARRANT, RAMP LENGTHS SHOULD BE INCREASED TO KEEP GRADES UNDER THE 8.3% MAXIMUM, BUT SHALL NOT EXCEED 15'. THE RESULTING RAMP GRADE AT A 15' RAMP LENGTH IS ACCEPTABLE EVEN IF IT EXCEEDS 8.3%.
4. CONSTRUCT SIDEWALK CROSS-SLOPES AT 1.5% (0.5% MIN. AND 2.0% MAX.).
5. CONSTRUCT GRADE BREAKS PERPENDICULAR TO RAMP RUNS.
6. PROVIDE A COARSE BROOM FINISH RUNNING PERPENDICULAR TO THE CURB ON RAMP RUNS AND UPPER LANDINGS AND PARALLEL TO THE CURB ON LOWER LANDINGS.
7. INSTALL 24" DETECTABLE WARNING TILES FOR THE FULL WIDTH OF THE RAMP. ALIGN TRUNCATED DOME PATTERN IN THE PREDOMINANT DIRECTION OF WHEELCHAIR TRAVEL TO PERMIT WHEELS TO ROLL BETWEEN DOMES.
8. LENGTH OF LANDING:
   A. IF A CONSTRAINT EXISTS AT BACK OF SIDEWALK THAT INHIBITS TURNING, LENGTH OF LANDING IS 60".
   B. IF NO CONSTRAIN EXISTS, LENGTH OF LANDING IS 48".

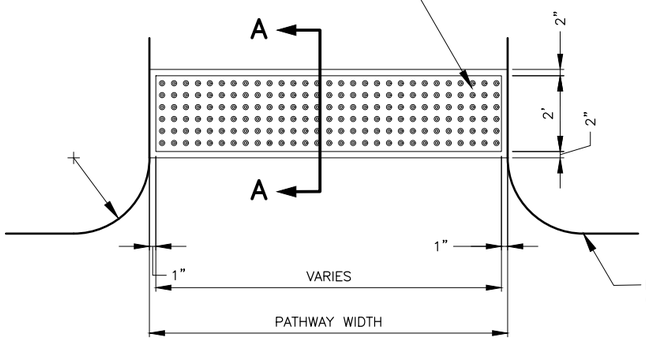

PLAN

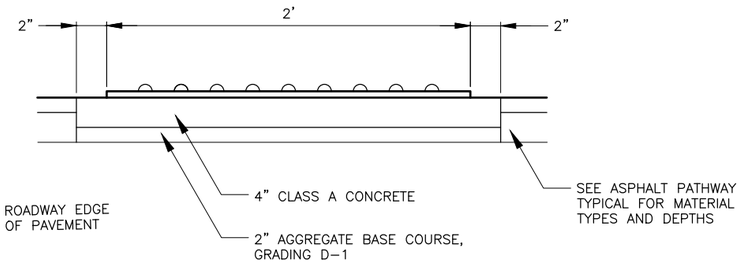

SECTION A–A

ASPHALT PATHWAY DETECTABLE WARNING TILE

ASPHALT PATHWAY NOTES:

1. SEE STD. DWG I–21 FOR ADDITIONAL REQUIREMENTS OF DETECTABLE WARNING TILES.

STATE OF ALASKA
PROFESSIONAL ENGINEER
PS&E REVIEW
JULY 2026

PLANS DEVELOPED BY:
LOUNSBURY & ASSOCIATES INC.
3230 C ST, SUITE 201,
ANCHORAGE, AK 99503
(907)272-5451
CERTIFICATE OF AUTHORITY NO. AECC391

STATE OF ALASKA
DEPARTMENT OF TRANSPORTATION
AND PUBLIC FACILITIES

HERMON RD EXTENSION AND UPGRADE, PARKS HWY TO PALMER–WASILLA HWY

CURB RAMPS AND DETECTABLE WARNING TILE DETAILS

NO.	DATE	REVISION

STATE	PROJECT DESIGNATION	YEAR	SHEET NO.	TOTAL SHEETS
ALASKA	0001729/CFHWY00799	2027	E5	E8

DESIGNED BY SRT
CHECKED BY KLK
DRAFTED BY JHK

SCALE AS SHOWN

DATE TIME 8/7/2026 11:09 AM

DRAWING LOCATION
C:_DOWL_PW\0043398\00799_E01_DTL.DWG

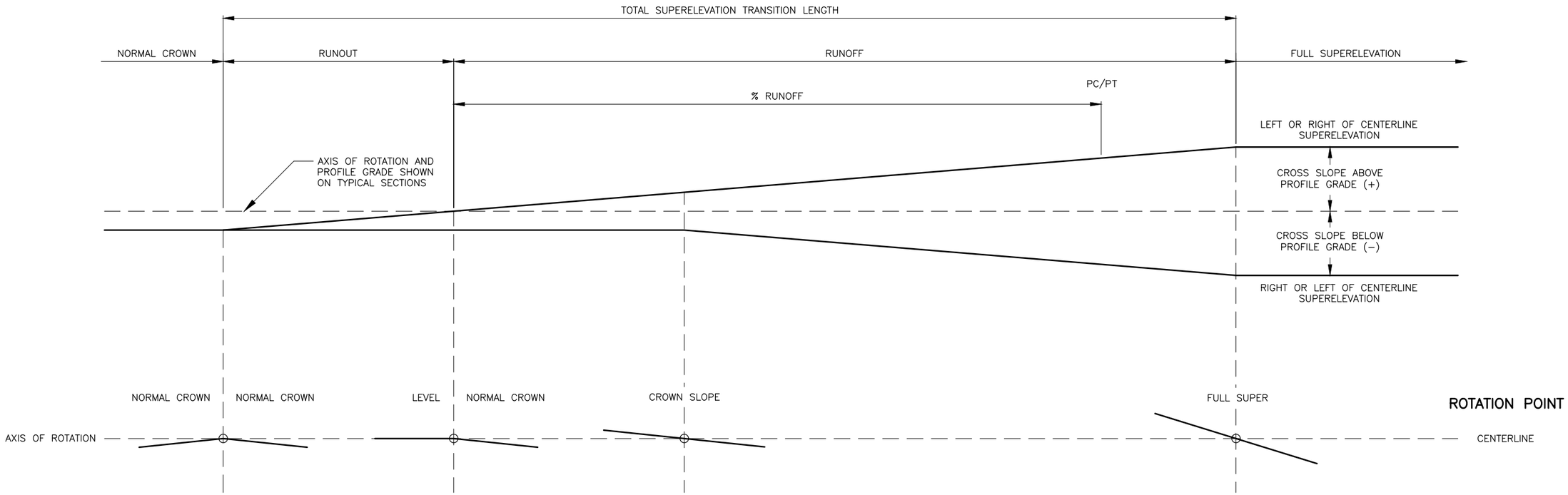

SUPERELEVATION TRANSITION

SUPERELEVATION TRANSITION TABLE (FOR TWO-LANE ROADWAYS)	
DESIGN SPEED (MPH)	Δ_{MAX}/L (%/FT)
≤ 20	0.066
25	0.060
30	0.055
35	0.051
40	0.047
45	0.044
≥ 50	0.042

TRANSITION RATES ARE DERIVED FROM TABLE 3–16a OF THE 2018 AASHTO A POLICY ON GEOMETRIC DESIGN OF HIGHWAYS AND STREETS (GREEN BOOK).

ADJUSTMENT FACTOR TABLE (FOR MULTI-LANE ROADWAYS)	
NUMBER OF LANES ROTATED	ADJUSTMENT FACTOR
1	1.00
1.5	0.83
2	0.75
2.5	0.70
3	0.67
3.5	0.64

ADJUSTMENT FACTORS FROM TABLE 3–15 OF THE 2018 AASHTO A POLICY ON GEOMETRIC DESIGN OF HIGHWAYS AND STREETS (GREEN BOOK).

NOTES:

1. BUILD SUPERELEVATION INTO SUBGRADE AND CARRY THROUGH SHOULDERS.
2. % RUNOFF = PORTION OF RUNOFF ON TANGENT. % RUNOFF IS 0.67 UNLESS OTHERWISE SPECIFIED.
3. WIDENING FOR GUARDRAIL OR CURVATURE DOES NOT CHANGE THE LOCATION OF THE AXIS OF ROTATION.
4. SEE SUPERELEVATION TRANSITION TABLE FOR MAXIMUM LATERAL SLOPE TRANSITION RATES (Δ_{MAX}/L) PER LINEAR FOOT OF ROADWAY FOR A TWO–LANE ROAD.
5. FOR ROADWAYS WITH MORE THAN TWO LANES, USE THE VALUES SHOWN IN THE ADJUSTMENT FACTORS TABLE TO MODIFY THE MAXIMUM LATERAL SLOPE TRANSITION RATE PER LINEAR FOOT OF ROADWAY.
6. TOTAL SUPERELEVATION TRANSTITION LENGTH (RUNOUT PLUS RUNOFF) IS EQUAL TO ((NUMBER OF LANES ROTATED)*(TOTAL PERCENT SLOPE CHANGE)*(ADJUSTMENT FACTOR)) / (MAX LATERAL SLOPE TRANSITION RATE).

STATE OF ALASKA
PS&E REVIEW
AUGUST 2026
PROFESSIONAL ENGINEER

DOWL, LLC
5015 BUSINESS PARK BLVD
SUITE 4000
ANCHORAGE, AK 99503
(907) 562-2000
#AECL848 – AK

STATE OF ALASKA
DEPARTMENT OF TRANSPORTATION AND PUBLIC FACILITIES

HERMON RD EXTENSION AND UPGRADE, PARKS HWY TO PALMER–WASILLA HWY

SUPERELEVATION TRANSITION DETAILS

NO.	DATE	REVISION

STATE	PROJECT DESIGNATION	YEAR	SHEET NO.	TOTAL SHEETS
ALASKA	0001729/CFHWY00799	2027	E6	E8

DESIGNED BY SRT
CHECKED BY KLK
DRAFTED BY JHK

SCALE AS SHOWN

DATE TIME 8/7/2026 11:09 AM

DRAWING LOCATION C:\DOWL_PW\00433398\00799_E01_DTL.DWG

NOTES:

1. WARP DRIVEWAY CROSS SLOPE TO 1.5% WITHIN THE EDGE OF PATHWAY EXTENDED OR AS DIRECTED BY THE ENGINEER.
2. PROFILE IS OF INNER EDGE OF PATHWAY.
3. UNLESS OTHERWISE APPROVED BY THE ENGINEER, PROFILE TRANSITION SHALL USE THE TYPICAL VALUES PROVIDED.
4. UNLESS OTHERWISE INDICATED, PAVE TO FURTHEST RADIUS RETURN OR 10' BEHIND PATHWAY, WHICHEVER IS GREATER.
5. ADJUST SLOPES AS REQUIRED TO TRANSITION PATHWAY PROFILE AT DRIVEWAYS AND APPROACHES.

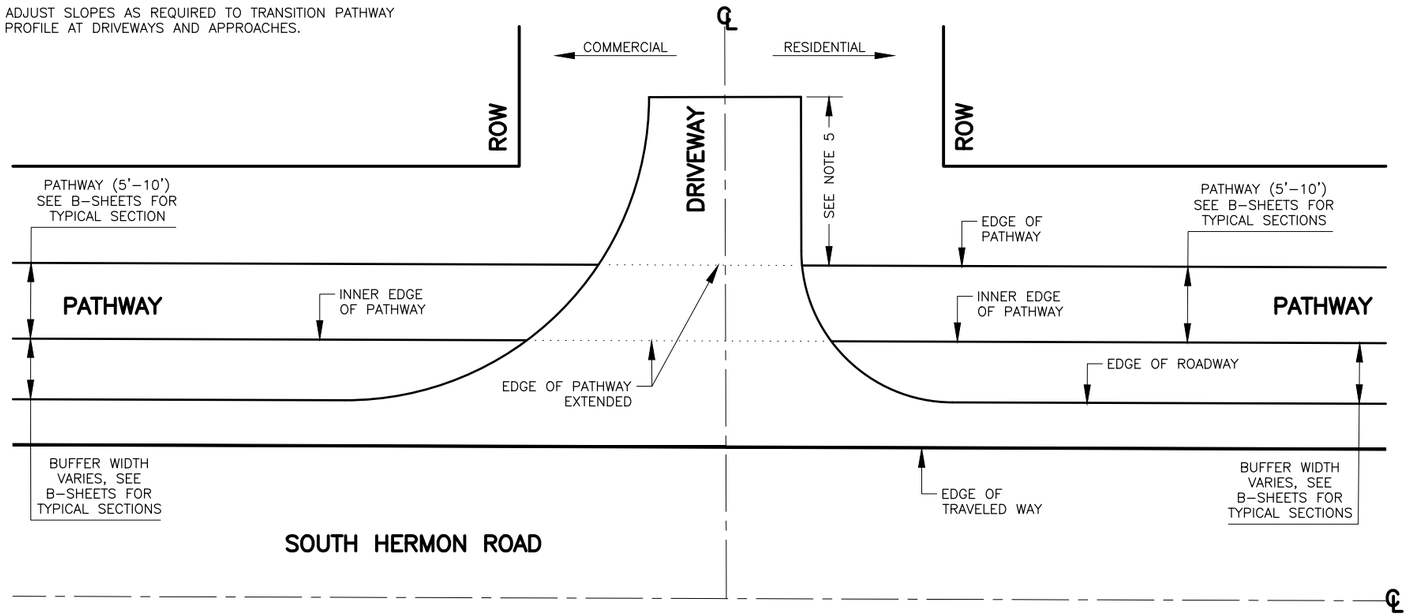

PLAN

DIRECTION OF TRAFFIC

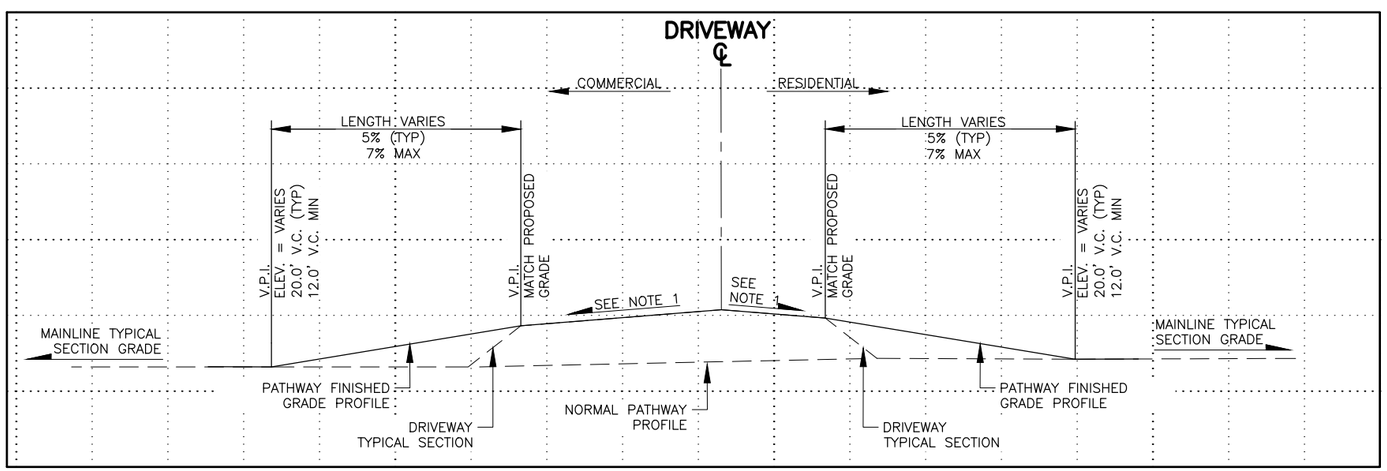

PROFILE

VERTICAL SCALE X4

PATHWAY PROFILE TRANSITION TREATMENT AT DRIVEWAYS

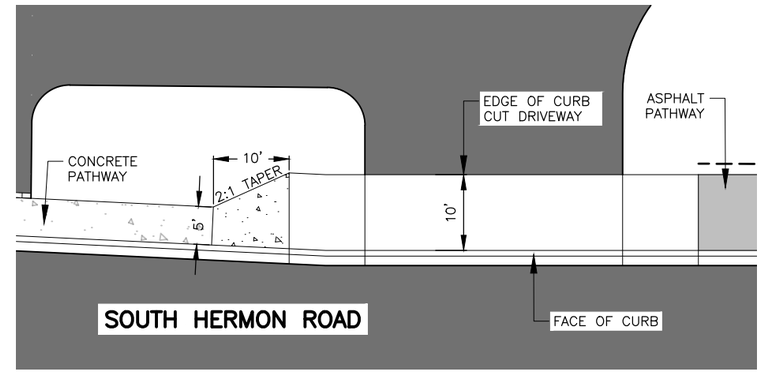

CONCRETE/ASPHALT PATHWAY TRANSITION DETAILS

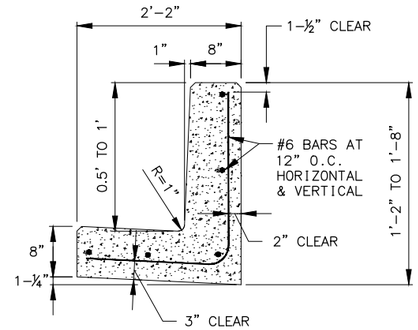

CURB TYPE RETAINING WALL

CURB TYPE RETAINING WALL NOTES:

1. PROVIDE 3/4" X 3/4" CHAMFERED CORNERS AT ALL OUTSIDE EDGES.
2. NO VEHICLE TRAFFIC WITHIN 3 FEET OF TOP OF WALL.

STATE OF ALASKA
PROFESSIONAL ENGINEER
PS&E REVIEW AUGUST 2026

DOWL, LLC
5015 BUSINESS PARK BLVD
SUITE 4000
ANCHORAGE, AK 99503
(907) 562–2000
#AECL848 – AK

STATE OF ALASKA
DEPARTMENT OF TRANSPORTATION AND PUBLIC FACILITIES

HERMON RD EXTENSION AND UPGRADE, PARKS HWY TO PALMER–WASILLA HWY

PATHWAY TRANSITION AND CURB TYPE RETAINING WALL DETAILS

NO.	DATE	REVISION

STATE	PROJECT DESIGNATION	YEAR	SHEET NO.	TOTAL SHEETS
ALASKA	0001729/CFHWY00799	2027	E7	E8

DESIGNED BY	SRT
CHECKED BY	KLK
DRAFTED BY	JHK

SCALE	DATE	TIME
AS SHOWN	8/7/2026	11:09 AM

DRAWING LOCATION
C:\DOWL_PW\00433398\00799_E01_DTL.DWG

RIPRAP APRON SUMMARY

RIPRAP CLASS	D (IN)	L (FT)	W (FT)	H (FT)
I	36.0	18.0	21.0	2.0
I	24.0	12.0	14.0	2.0
I	18.0	9.0	10.0	2.0

SPECIAL OUTLET APRON SUMMARY

PIPE ID	RIPRAP CLASS	D (IN)	L (FT)	H (FT)
P1–1	I	18.0	9.0	2.0
P2–4	I	18.0	9.0	2.0
P3–7	I	24.0	21.0	2.0

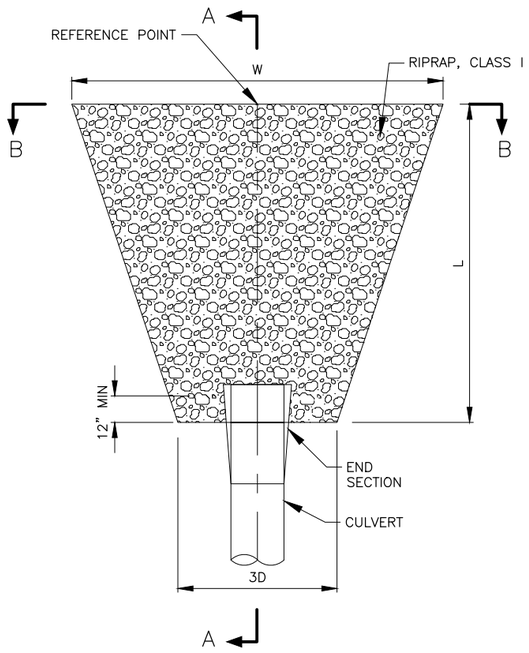

PLAN

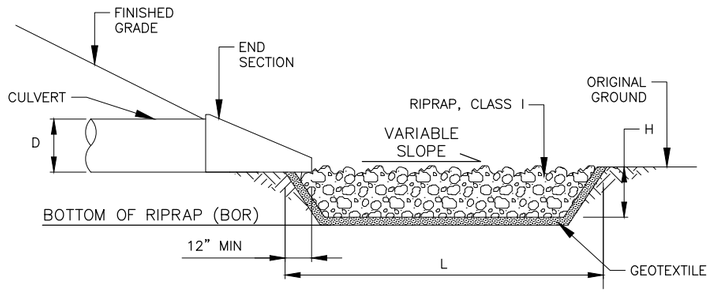

SECTION A–A

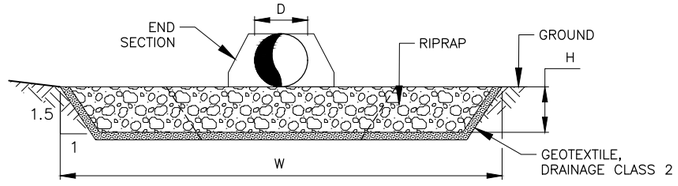

SECTION B–B

RIPRAP APRON

N.T.S.

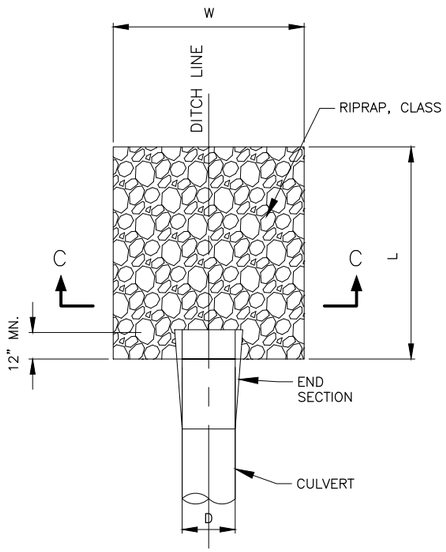

PLAN

D (IN)	L (FT)	W (FT)
36.00	18.0	7.0
24.00	12.0	6.0
18.00	9.0	5.5
NO CULVERT	18.0	7.0

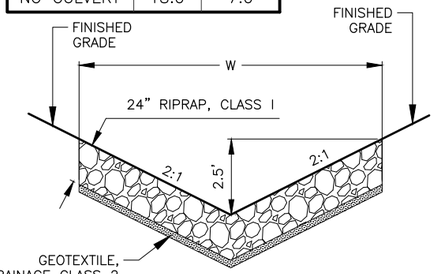

SECTION C–C

ENERGY DISSIPATOR NOTE:

1. RIPRAP SHALL BE INSTALLED ON 2:1 OR FLATTER SLOPES.

ENERGY DISSIPATOR

N.T.S.

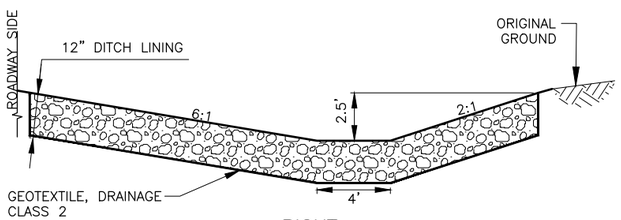

RIGHT

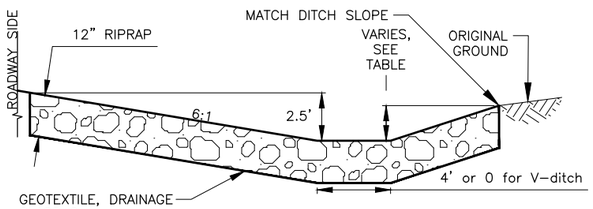

RIGHT

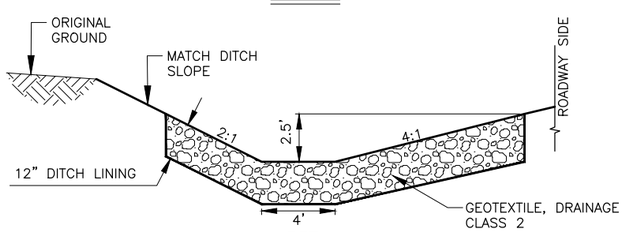

LEFT

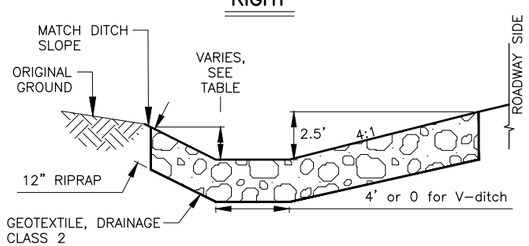

LEFT

DITCH LINING TYPICAL SECTION

N.T.S.
REFER TO D–SHEETS FOR BEGIN AND END STATION AND OFFSET SUMMARY.

SPECIAL DITCH TYPICAL SECTION

N.T.S.
REFER TO D–SHEETS FOR BEGIN AND END STATION AND OFFSET SUMMARY.

SPECIAL DITCH DEPTHS		
START STA.	END STA.	DEPTH (FT)
28+49 LT	28+86 LT	2.0
32+20 LT	33+11 LT	2.0
32+50 RT	33+51 RT	2.0
36+90 LT	37+60 LT	0.5
37+60 LT	38+50 LT	0.6
38+13 LT	38+20 LT	0.9
38+20 LT	38+41 LT	1.7
38+41 LT	38+50 LT	2.0
37+75 RT	38+59 RT	2.0
42+90 LT	43+14 LT	1.2
43+15 LT	435+06 LT	2.0
44+43 LT	44+75 RT	2.0

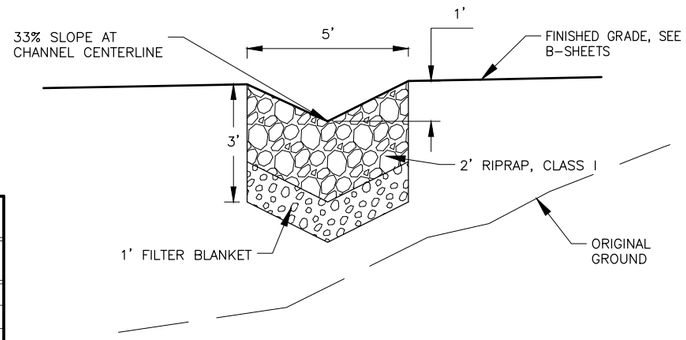

ROCK FLUME

N.T.S.
LOCATE CENTER OF FLUME AT STATION PROVIDED IN D–SHEETS.

DOWL, LLC
5015 BUSINESS PARK BLVD
SUITE 4000
ANCHORAGE, AK 99503
(907) 562–2000
#AECL848 – AK

PS&E REVIEW AUGUST 2026

STATE OF ALASKA
DEPARTMENT OF TRANSPORTATION AND PUBLIC FACILITIES

HERMON RD EXTENSION AND UPGRADE, PARKS HWY TO PALMER–WASILLA HWY

CULVERT END SECTION, DITCH LINING, AND RIPRAP APRON DETAILS

NO.	DATE	REVISION

STATE	PROJECT DESIGNATION	YEAR	SHEET NO.	TOTAL SHEETS
ALASKA	0001729/CFHWY00799	2027	E8	E8

DESIGNED BY SRT
CHECKED BY KLK
DRAFTED BY JHK
SCALE AS SHOWN
DATE TIME 8/7/2026 11:09 AM
DRAWING LOCATION C:\DOWL_PW\D0433398\00799_E01_DTL.DWG

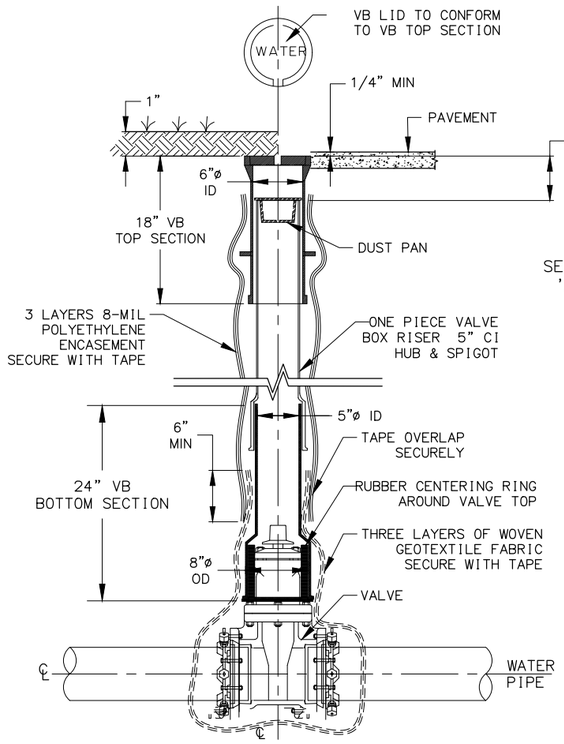

TYPICAL VALVE BOX (VB)

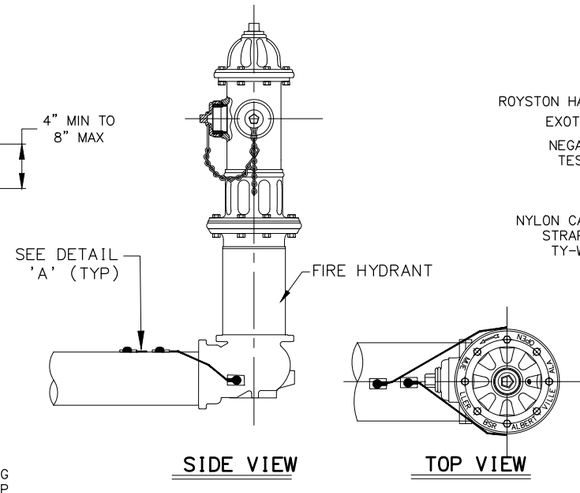

SIDE VIEW

TOP VIEW

JOINT BONDING OF A HYDRANT

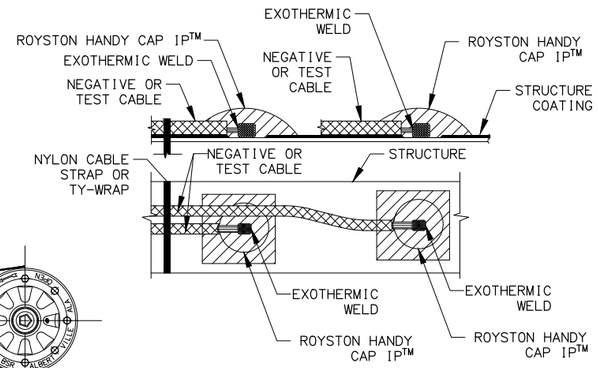

DETAIL 'A'

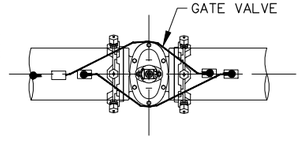

TOP VIEW

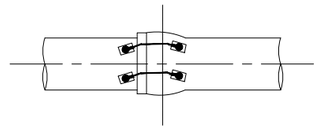

JOINT BONDING BELL/SPIGOT PIPE

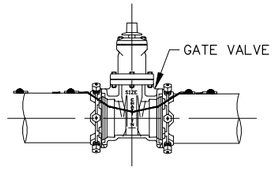

SIDE VIEW

JOINT BONDING ACROSS VALVE

NOTE:

1. ENTIRE VALVE ASSEMBLY TO BE FIELD COATED WITH 4-PART AWWA C217 WAX TAPE SYSTEM.

VALVE BOX NOTES:

1. SEE SPECIFICATIONS FOR MATERIAL REQUIREMENTS.
2. VALVE BOX ASSEMBLY IS TO BE PLUMB.
3. DIMENSIONS ARE NOMINAL.
4. THIS DETAIL IS ONLY INTENDED FOR USE WHEN RELOCATING FIRE HYDRANTS.

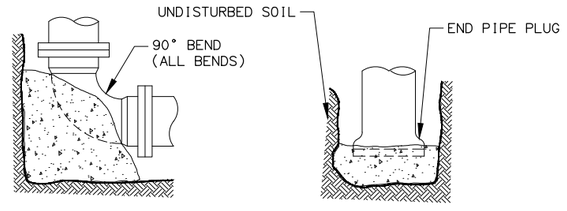

THRUST BLOCK

MINIMUM BASE AREA SQUARE FEET				
PIPE SIZE	PLUG	90° BEND	45° BEND	22½° BEND
6"	2.0	2.0	1.0	1.0
8"	2.5	2.5	1.5	1.5
10"	4.5	4.5	2.5	2.5
12"	6.0	6.0	3.5	3.5
14"	8.0	8.0	4.5	4.5
16"	10.5	10.5	6.0	6.0
24"	24.0	24.0	13.0	13.0

THRUST BOX NOTES:

1. MINIMUM THICKNESS OF PRE-CAST CONCRETE THRUST BLOCKS SHALL BE 6-INCH OR AS PER THE CONTRACT SPECIFICATIONS.
2. THRUST BLOCK MAY NOT BE USED IN LIEU OF THRUST RESTRAINT.
3. CAST IN PLACE THRUST BLOCKS MUST BE CAST AGAINST UNDISTURBED SOIL (HATCH).

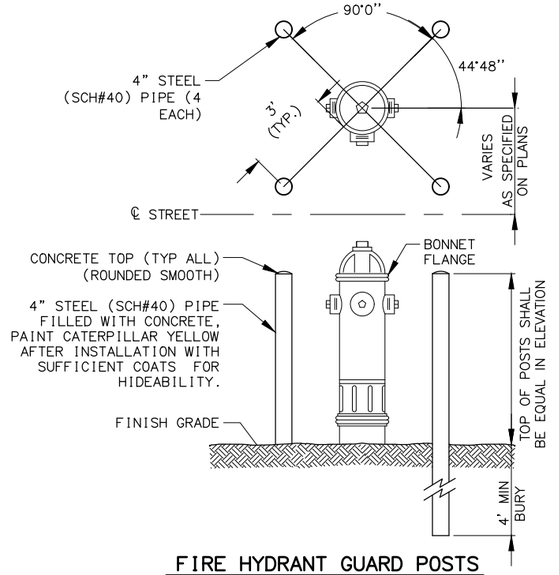

FIRE HYDRANT GUARD POSTS

GUARD POST NOTES:

1. GUARD POSTS WILL BE FURNISHED & INSTALLED BY THE CONTRACTOR AND APPROVED BY THE ENGINEER.
2. GUARD POSTS SHALL BE INSTALLED PLUMB AND LOCATED TO ALLOW UNRESTRICTED ACCESS TO PUMPER AND HOSE CONNECTIONS.
3. GUARD POST REMOVAL AND REPLACEMENT WILL BE PAID FOR UNDER SECTION 627 OF THE DOT&PF SSHC.

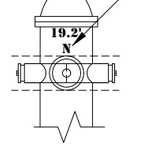

FRONT VIEW

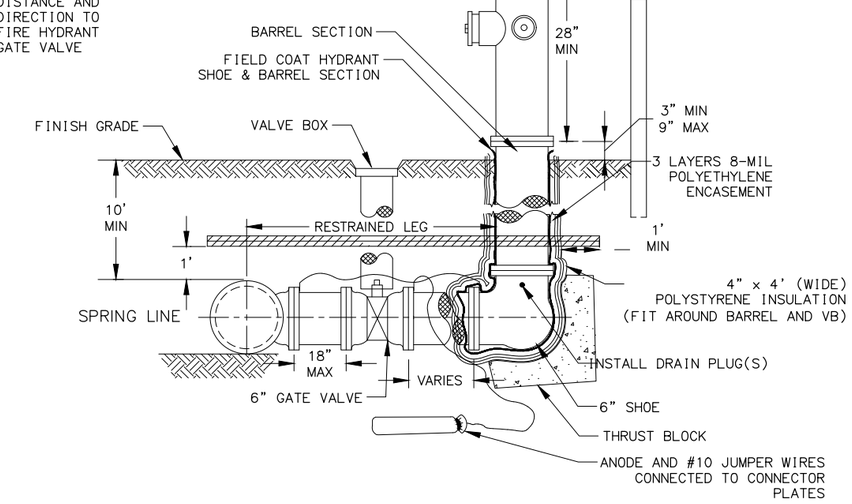

SINGLE PUMPER "L" BASE FIRE HYDRANT ASSEMBLY

"HR" STA. 12+13.00, 36.5' RT

BASE ASSEMBLY NOTES:

1. HYDRANT BARREL SHALL BE INSTALLED PLUMB AND THE LEG SHALL BE LEVEL.
2. ALL BACKFILL MATERIAL WITHIN 3 FEET AROUND HYDRANT BARREL SHALL BE NFS.
3. ALL PVC C-900 HYDRANT LEG SHALL HAVE THRUST BLOCKS.
4. DUCTILE IRON HYDRANT LEGS DO NOT REQUIRE A THRUST BLOCK.

STATE OF ALASKA
PS&E REVIEW
AUGUST 2026
PROFESSIONAL ENGINEER

DOWL LLC
5015 BUSINESS PARK BLVD
SUITE 4000
ANCHORAGE, AK 99503
(907) 562-2000
#AECL848 - AK

STATE OF ALASKA
DEPARTMENT OF TRANSPORTATION AND PUBLIC FACILITIES

HERMON RD EXTENSION AND UPGRADE, PARKS HWY TO PALMER-WASILLA HWY

FIRE HYDRANT DETAILS

DESIGNED BY JHK
CHECKED BY ST
DRAFTED BY JHK

SCALE 1" = 20'

DATE 8/7/2026 TIME 11:09 AM

DRAWING LOCATION
C:\DOWL_PW\0433398\00799_F_P&P.DWG

BEGIN PROJECT
STA. "HR" 10+50.00
N 142449.0890
E 434380.3868

SAWCUT
STA. "HR" 11+78.25
OFFSET 88.64' LT

EAST SUN MOUNTAIN AVENUE

ROW

BEGIN CONCRETE SIDEWALK WALL
STA. "HR" 12+17.33
OFFSET 35.00' LT

END CONCRETE SIDEWALK WALL
STA. "HR" 13+51.16
OFFSET 31.88' LT

SEE SHEET G8 FOR SPECIAL GRADING

PRESERVE AND PROTECT IN PLACE EXISTING SIGN

OBLITERATION OF ROADWAY

PROP ROW

ROW

S1-3

F1

P1-3

P1-2

S1-4

BEGIN DIGOUT
STA. "HR" 11+64.25
OFFSET 0.00' T

BEGIN TAPER
STA. "HR" 12+85.00
OFFSET 28.00' LT

END TAPER
STA. "HR" 13+90.00
OFFSET 23.00' LT

"HR" 11+00

"HR" 12+00

"HR" 13+00

"HR" 14+00

"HR" 15+00

"HR" 1

SAWCUT
STA. "HR" 10+84.73
OFFSET 23.00' RT

BEGIN TAPER
STA. "HR" 11+97.58
OFFSET 21.28' RT

END TAPER
STA. "HR" 13+49.91
OFFSET 23.00' RT

STA. "HR" 14+10
STA. "MV" 100+00
N: 142809.1362
E: 434376.9401

SOUTH HERMON ROAD

N00°32'54.5"W

MATCH LINE STA. 16+00

S1-2

R=45.0'

P1-1

ROW

OBLITERATION OF ROADWAY

EAST MOUNTAIN VILLAGE DRIVE ACCESS

SEE SHT F11

101+00

ROW

RIPRAP APRON, SEE DETAIL SHEET E7

SAWCUT
STA. "HR" 11+60.63
OFFSET 22.92' RT

SAWCUT
STA. "HR" 11+28.57
OFFSET 80.52' RT

ROW

OBLITERATION OF ROADWAY

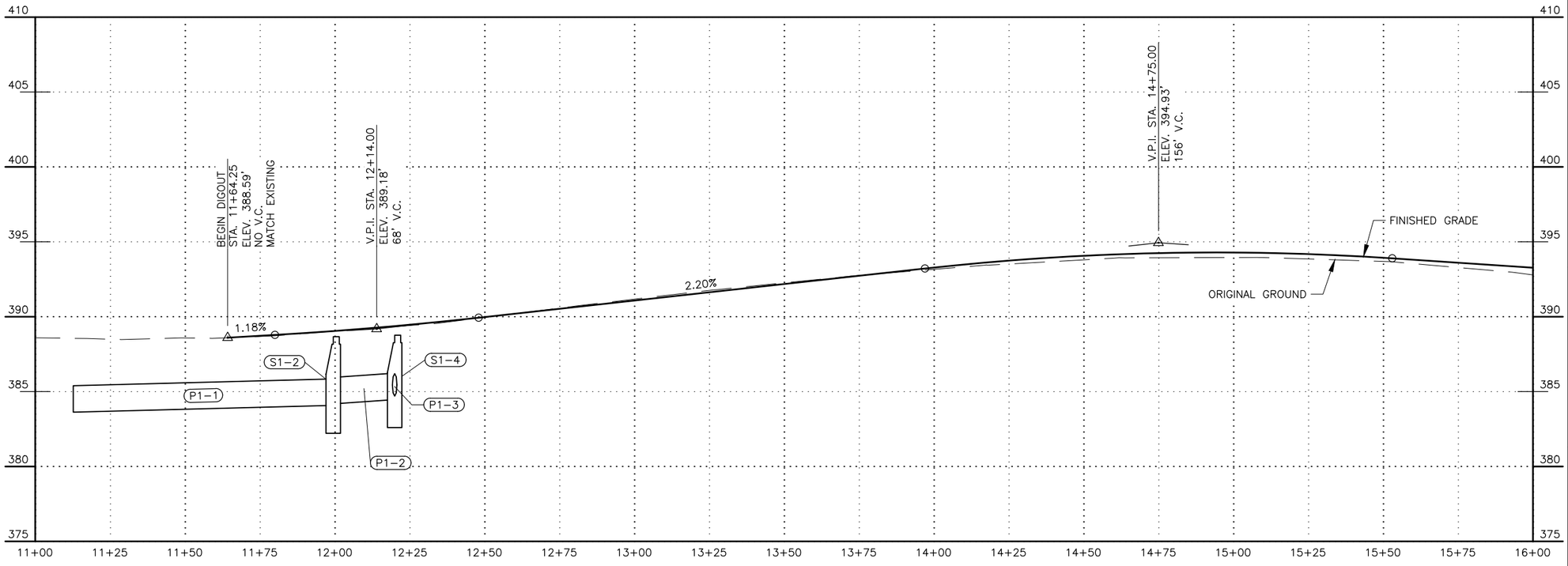

SHEET NO.	TOTAL SHEETS
F1	F14
STATE	YEAR
ALASKA	2027

PROJECT DESIGNATION
0001729/
CFHWY00799

NO.	REVISION
DATE	

NO.	REVISION
DATE	

NO.	REVISION
DATE	

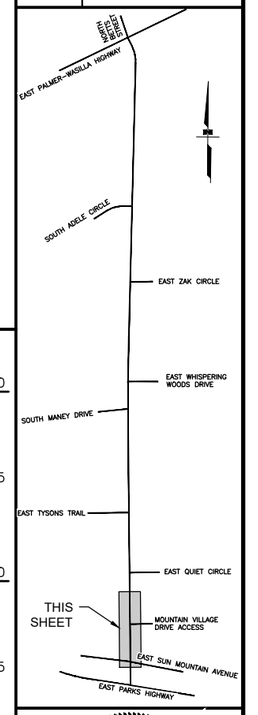

STATE OF AL
PS&E REVIEW
AUGUST 2026
PROFESSIONAL ENGINEER

DOWL, LLC
5015 BUSINESS PARK BLVD
SUITE 4000
ANCHORAGE, AK 99503
(907) 562-2000
#AECL848 – AK

STATE OF ALASKA
DEPARTMENT OF TRANSPORTATION AND PUBLIC FACILITIES

HERMON ROAD PARKS HIGHWAY TO PALMER-WASILLA HIGHWAY

HERMON ROAD STA 11+00 TO STA 16+00

DESIGNED BY JHK
CHECKED BY ST
DRAFTED BY JHK

SCALE 1" = 20'

DATE 8/7/2026 TIME 11:09 AM

DRAWING LOCATION C:\DOWL_PW\00433986\00799_F_P&P.DWG

MATCH LINE STA. 16+00

MATCH LINE STA. 21+00

SEE SHEET G9 FOR SPECIAL GRADING

SEE SHEET G9 FOR SPECIAL GRADING

PROP ROW

ROW

STA. "HR" 17+54
STA. "QC" 200+00
N: 143153.4348
E: 434373.6441

"HR" 17+00

"HR" 18+00

"HR" 19+00

"HR" 20+00

SOUTH HERMON ROAD

N00°32'54.5"W

S2-1

S2-2

S2-3

P2-1

P2-2

P2-3

EAST QUIET CIRCLE

SEE SHT F11

201+00

ENERGY DISSIPATOR, SEE DETAIL SHEET E7

CAUTION OVERHEAD ELECTRIC CROSSING ELEV: 410.6'

V.P.I. STA. 18+25.00
ELEV. 390.27'
250' V.C.

V.P.I. STA. 20+75.00
ELEV. 396.61'
240' V.C.

FINISHED GRADE

ORIGINAL GROUND

-1.33%

2.53%

410
405
400
395
390
385
380
375

16+00 16+25 16+50 16+75 17+00 17+25 17+50 17+75 18+00 18+25 18+50 18+75 19+00 19+25 19+50 19+75 20+00 20+25 20+50 20+75 21+00

SHEET NO.	TOTAL SHEETS
F2	F14
STATE	YEAR
ALASKA	2027

PROJECT DESIGNATION
0001729/
CFHWY00799

NO.	REVISION
DATE	
NO.	REVISION
DATE	
NO.	REVISION
DATE	

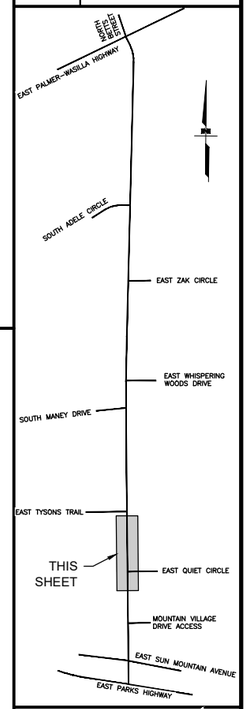

STATE OF ALASKA
PS&E REVIEW
AUGUST 2026
PROFESSIONAL ENGINEER

DOWL, LLC
5015 BUSINESS PARK BLVD
SUITE 4000
ANCHORAGE, AK 99503
(907) 562-2000
#AECL848 - AK

STATE OF ALASKA
DEPARTMENT OF TRANSPORTATION
AND PUBLIC FACILITIES

HERMON ROAD
PARKS HIGHWAY TO
PALMER-WASILLA HIGHWAY

HERMON ROAD STA 16+00 TO STA 21+00

DESIGNED BY	JHK
CHECKED BY	ST
DRAFTED BY	JHK

SCALE
1" = 20'

DATE	TIME
8/7/2026	11:09 AM

DRAWING LOCATION
C:\DOWL_PW\00433398\00799_F_P&P.DWG

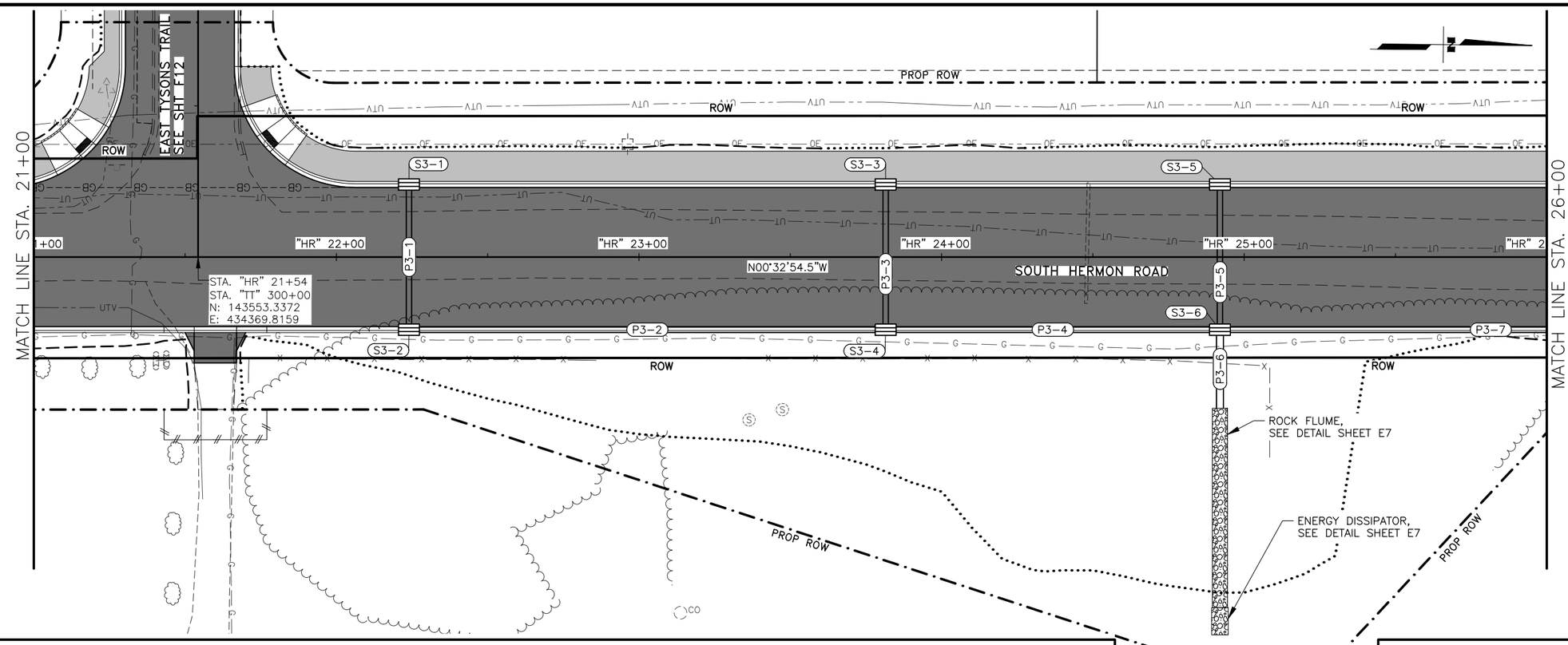

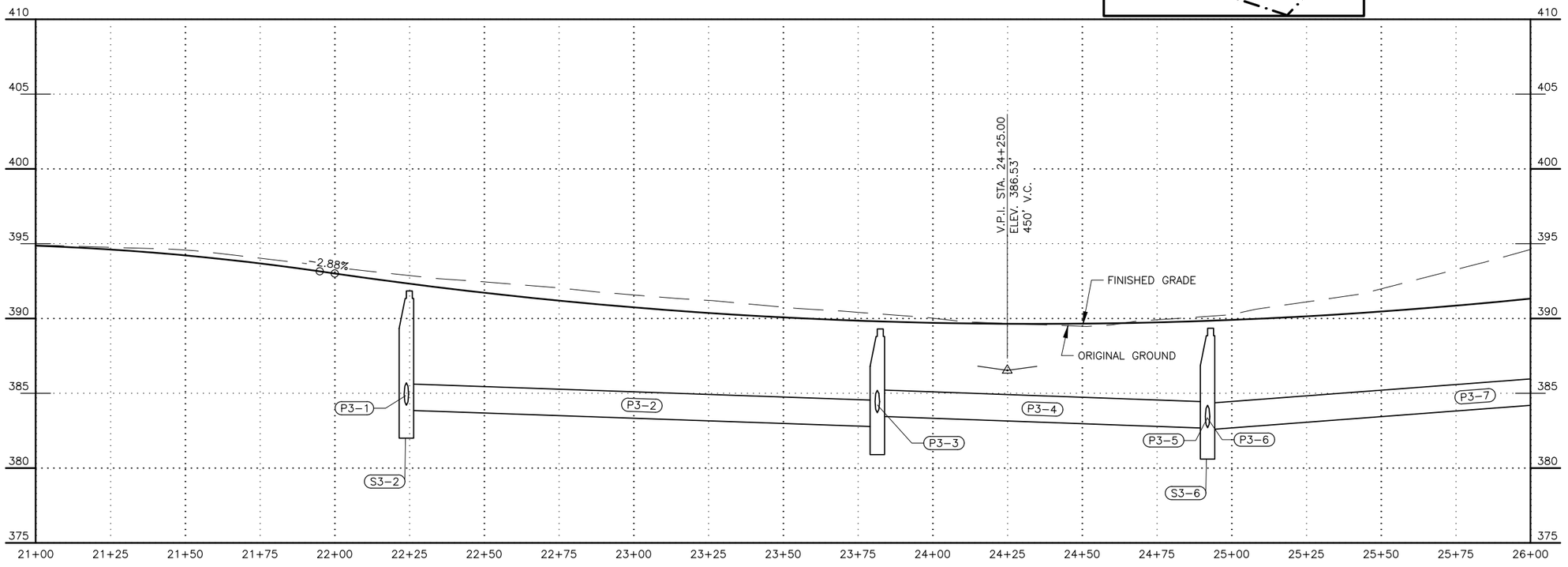

SHEET NO.	TOTAL SHEETS
F3	F14
STATE	YEAR
ALASKA	2027

PROJECT DESIGNATION
0001729/
CFHWY00799

NO.	REVISION
DATE	
NO.	REVISION
DATE	
NO.	REVISION
DATE	

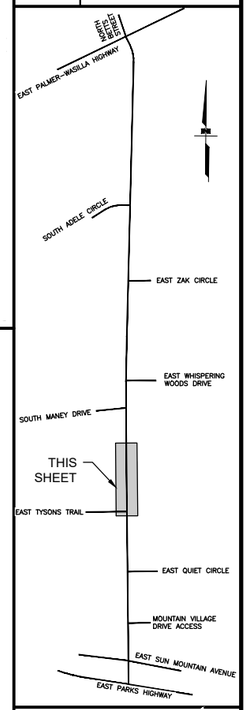

STATE OF AL
PS&E REVIEW
AUGUST 2026
PROFESSIONAL ENGINEER

DOWL, LLC
5015 BUSINESS PARK BLVD
SUITE 4000
ANCHORAGE, AK 99503
(907) 562-2000
#AECL848 - AK

STATE OF ALASKA
DEPARTMENT OF TRANSPORTATION
AND PUBLIC FACILITIES

HERMON ROAD
PARKS HIGHWAY TO
PALMER-WASILLA HIGHWAY

HERMON ROAD STA 21+00 TO STA 26+00

P.I. STA. "HR" 30+23.45
N = 144422.4534
E = 434361.4960
Δ = 001°59'11.3"
T = 301.66'
L = 603.27'
R = 17400.00'

MATCH LINE STA. 26+00

MATCH LINE STA. 31+00

SOUTH HERMON ROAD

SOUTH MANEY DRIVE

SEE SHT F12

EAST WHISPERING WOODS DRIVE

SEE SHT F13

PC STA. "HR" 27+21.79

401+00

501+00

N00°32'54.5"W

"HR" 27+00

"HR" 28+00

"HR" 29+00

"HR" 30+00

"HR" 3

PROP ROW

ROW

S4-1

S4-2

P4-1

P4-2

D4-1

D4-2

D4-3

D4-4

BEGIN TAPER
STA. "HR" 29+62.52
OFFSET 23.00' LT

END TAPER
STA. "HR" 30+62.15
OFFSET 21.00' LT

STA. "HR" 28+48
STA. "NM" 400+00
N: 144246.5613
E: 434363.6342

STA. "HR" 30+31
STA. "WW" 500+00
N: 144430.0952
E: 434364.1718

END TAPER
STA. "HR" 30+82.27
OFFSET 21.00' RT

BEGIN TAPER
STA. "HR" 29+62.15
OFFSET 23.00' RT

END CURB & GUTTER
STA. "HR" 28+70.00
OFFSET 27.00' RT

CAUTION
OVERHEAD
ELECTRIC
CROSSING ELEV:
426.8'

CAUTION
OVERHEAD
ELECTRIC
CROSSING ELEV:
419.6'

V.P.I. STA. 29+03.00'
ELEV. 399.21'
470' V.C.

ORIGINAL GROUND

FINISHED GRADE

2.65%

P3-7

410
405
400
395
390
385
380

26+00 26+25 26+50 26+75 27+00 27+25 27+50 27+75 28+00 28+25 28+50 28+75 29+00 29+25 29+50 29+75 30+00 30+25 30+50 30+75 31+00

SHEET NO.	TOTAL SHEETS
F4	F14
STATE	YEAR
ALASKA	2027

PROJECT DESIGNATION
0001729/
CFHWY00799

NO.	REVISION
DATE	
NO.	REVISION
DATE	
NO.	REVISION
DATE	

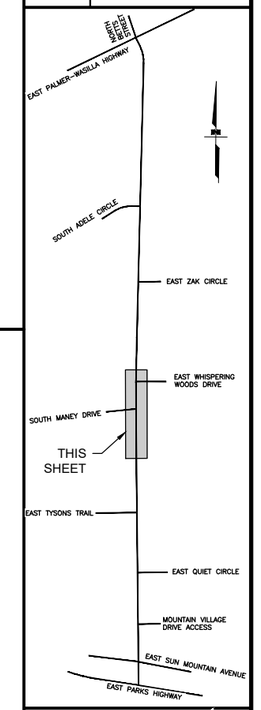

STATE OF ALASKA
PS&E REVIEW
AUGUST 2026
PROFESSIONAL ENGINEER

DOWL, LLC
5015 BUSINESS PARK BLVD
SUITE 4000
ANCHORAGE, AK 99503
(907) 562-2000
#AECL848 – AK

STATE OF ALASKA
DEPARTMENT OF TRANSPORTATION
AND PUBLIC FACILITIES

HERMON ROAD
PARKS HIGHWAY TO PALMER-WASILLA HIGHWAY
HERMON ROAD STA 26+00 TO STA 31+00

DESIGNED BY JHK
CHECKED BY ST
DRAFTED BY JHK

SCALE: 1" = 20'

DATE 8/7/2026 TIME 11:10 AM

DRAWING LOCATION
C:\DOWL_PW\00433398\00799_F_P&P.DWG

BEGIN TAPER
STA. "HR" 31+12.15
OFFSET 21.00' LT

PROP ROW

D5-1

MATCH LINE STA. 31+00

"HR" 32+00

"HR" 33+00

PT STA. "HR" 33+25.06

END TAPER
STA. "HR" 33+79.15
OFFSET 16.00' LT

P5-1

"HR" 34+00

"HR" 35+00

MATCH LINE STA. 36+00

ROW

SOUTH HERMON ROAD

N01°26'16.8"E

ROW

END TAPER
STA. "HR" 33+79.15
OFFSET 16.00' RT

PROP ROW

D5-2

BEGIN TAPER
STA. "HR" 31+11.91
OFFSET 21.00' RT

PROP ROW

CAUTION
OVERHEAD
ELECTRIC
CROSSING ELEV:
403.6'

FINISHED GRADE

-4.21%

V.P.I. STA. 35+58.00
ELEV. 371.63'
400' V.C.

ORIGINAL GROUND

P5-1

BEGIN SUBGRADE EXCAVATION,
SEE SHEET B1 FOR LIMITS AND
VERIFY WITH THE ENGINEER

10H:1V

3.5'

390
385
380
375
370
365
360
355

31+00 31+25 31+50 31+75 32+00 32+25 32+50 32+75 33+00 33+25 33+50 33+75 34+00 34+25 34+50 34+75 35+00 35+25 35+50 35+75 36+00

DESIGNED BY JHK
CHECKED BY ST
DRAFTED BY JHK

SCALE 1" = 20'

DATE 8/7/2026 TIME 11:10 AM

DRAWING LOCATION
C:\DOWL_PW\0043398\00799_F_P&P.DWG

SHEET NO.	TOTAL SHEETS
F5	F14
STATE	YEAR
ALASKA	2027

PROJECT DESIGNATION
0001729/
CFHWY00799

NO.	REVISION
DATE	
NO.	REVISION
DATE	
NO.	REVISION
DATE	

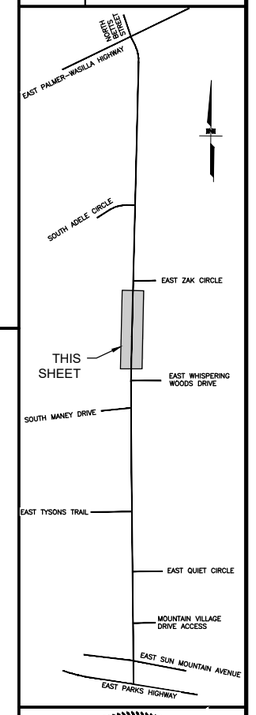

STATE OF AK
PS&E REVIEW
AUGUST 2026
PROFESSIONAL ENGINEER

DOWL, LLC
5015 BUSINESS PARK BLVD
SUITE 4000
ANCHORAGE, AK 99503
(907) 562-2000
#AECL848 - AK

STATE OF ALASKA
DEPARTMENT OF TRANSPORTATION
AND PUBLIC FACILITIES

HERMON ROAD
PARKS HIGHWAY TO
PALMER-WASILLA HIGHWAY

HERMON ROAD STA
31+00 TO STA
36+00

DESIGNED BY	JHK
CHECKED BY	ST
DRAFTED BY	JHK

SCALE
1" = 20'

DATE	TIME
8/7/2026	11:10 AM

DRAWING LOCATION
C:\DOWL_PW\00433398\00799_F_P&P.DWG

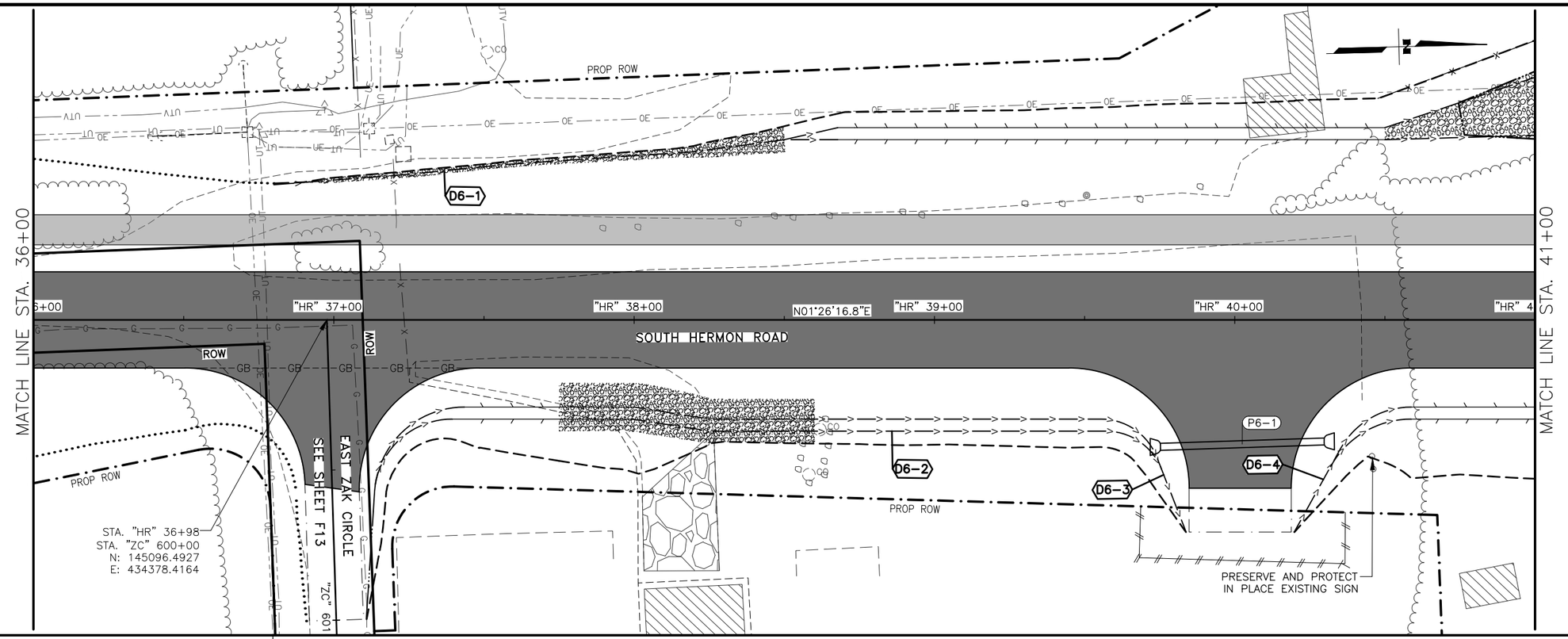

SHEET NO.	TOTAL SHEETS
F6	F14
STATE	YEAR
ALASKA	2027

PROJECT DESIGNATION
0001729/
CFHWY00799

NO.	REVISION
DATE	
NO.	REVISION
DATE	
NO.	REVISION
DATE	

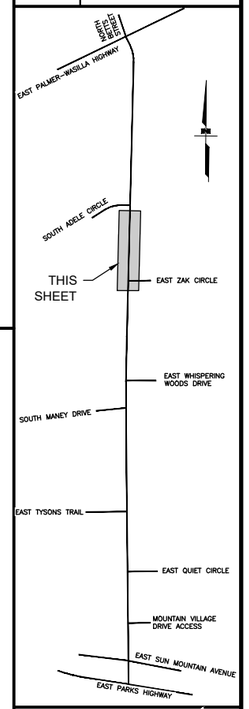

STATE OF ALASKA
PS&E REVIEW
AUGUST 2026
PROFESSIONAL ENGINEER

DOWL, LLC
5015 BUSINESS PARK BLVD
SUITE 4000
ANCHORAGE, AK 99503
(907) 562-2000
#AECL848 - AK

STATE OF ALASKA
DEPARTMENT OF TRANSPORTATION
AND PUBLIC FACILITIES

HERMON ROAD
PARKS HIGHWAY TO
PALMER-WASILLA HIGHWAY

HERMON ROAD STA 36+00 TO STA 41+00

DRAWING LOCATION
C:\DOWL_PW\00433398\00799_F_P&P.DWG

DATE	TIME
8/7/2026	11:10 AM

SCALE	
1" = 20'	

DESIGNED BY	JHK
CHECKED BY	ST
DRAFTED BY	JHK

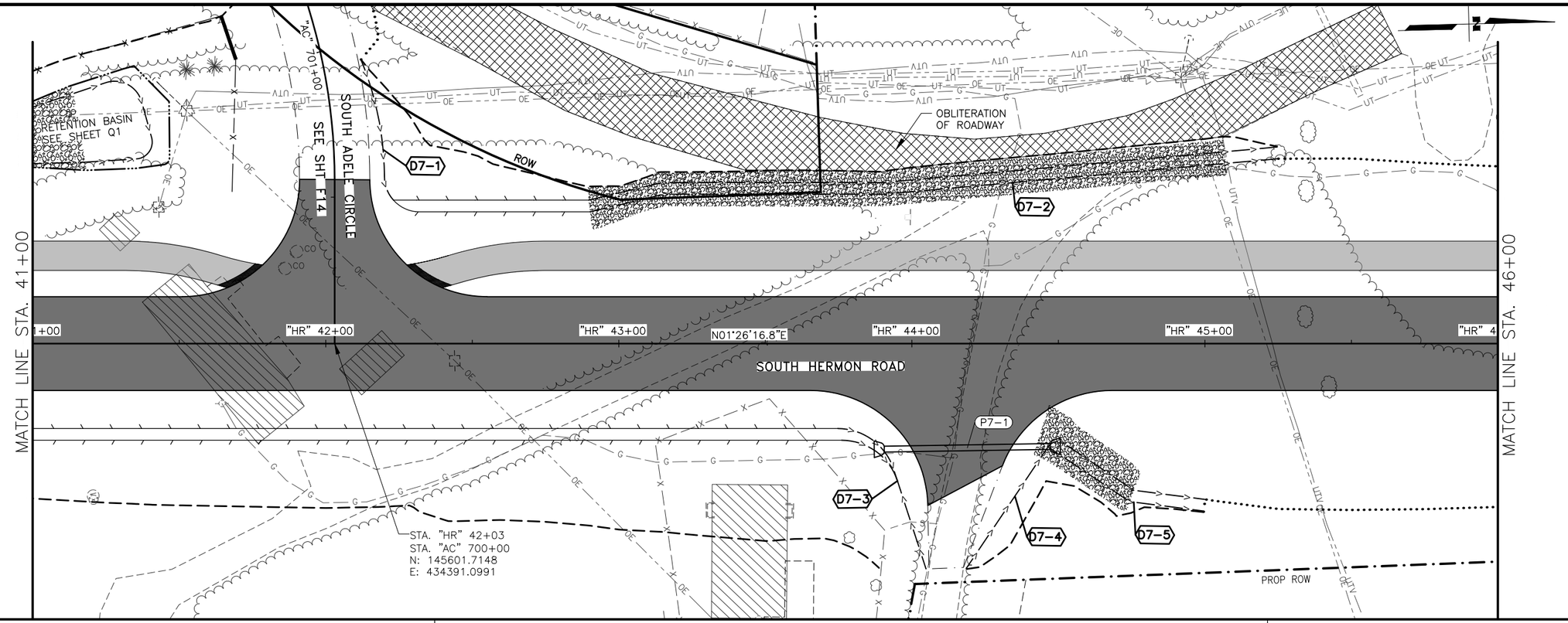

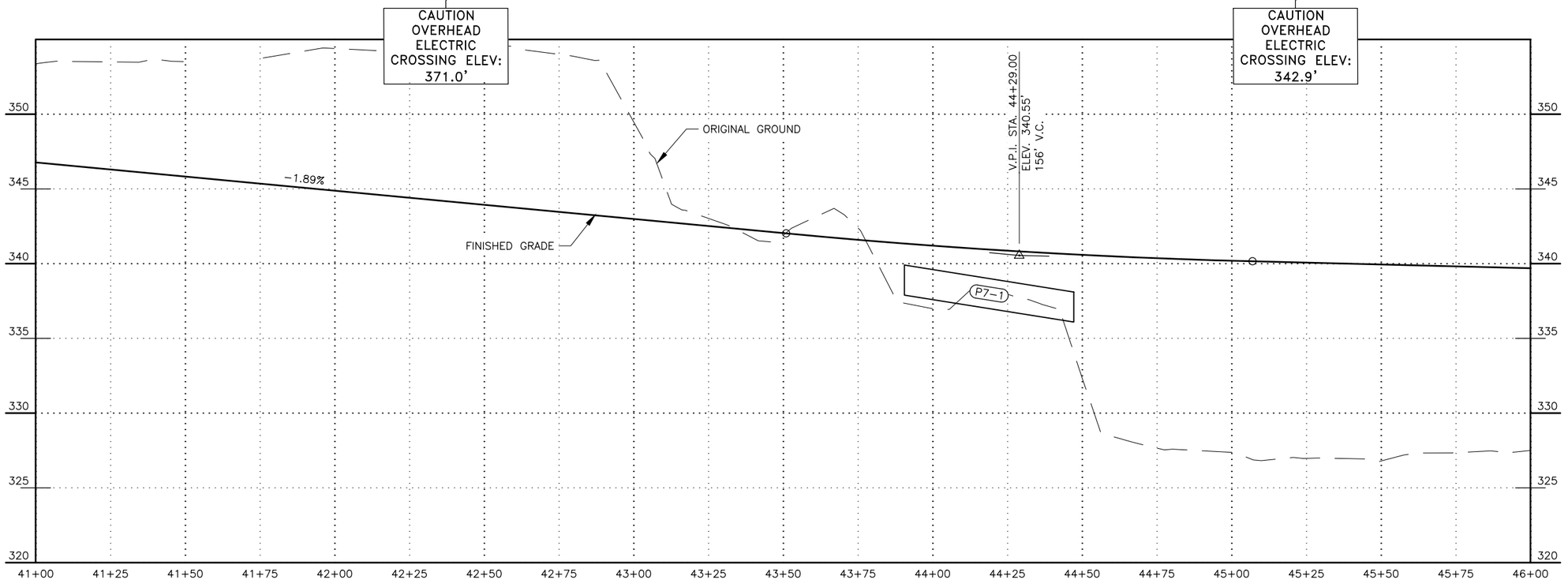

SHEET NO.	TOTAL SHEETS
F7	F14
STATE	YEAR
ALASKA	2027

PROJECT DESIGNATION
0001729/
CFHWY00799

NO.	REVISION
DATE	
NO.	REVISION
DATE	
NO.	REVISION
DATE	

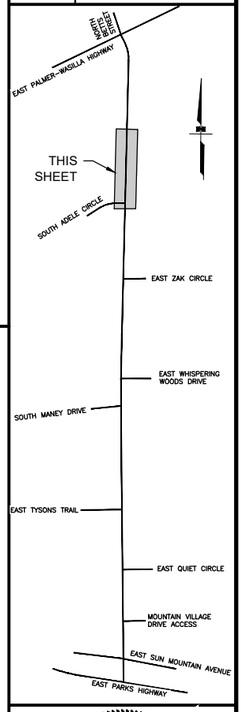

STATE OF ALASKA
PS&E REVIEW
AUGUST 2026
PROFESSIONAL ENGINEER

DOWL, LLC
5015 BUSINESS PARK BLVD
SUITE 4000
ANCHORAGE, AK 99503
(907) 562-2000
#AECL848 - AK

STATE OF ALASKA
DEPARTMENT OF TRANSPORTATION
AND PUBLIC FACILITIES

HERMON ROAD
PARKS HIGHWAY TO
PALMER-WASILLA HIGHWAY

HERMON ROAD STA 41+00 TO STA 46+00

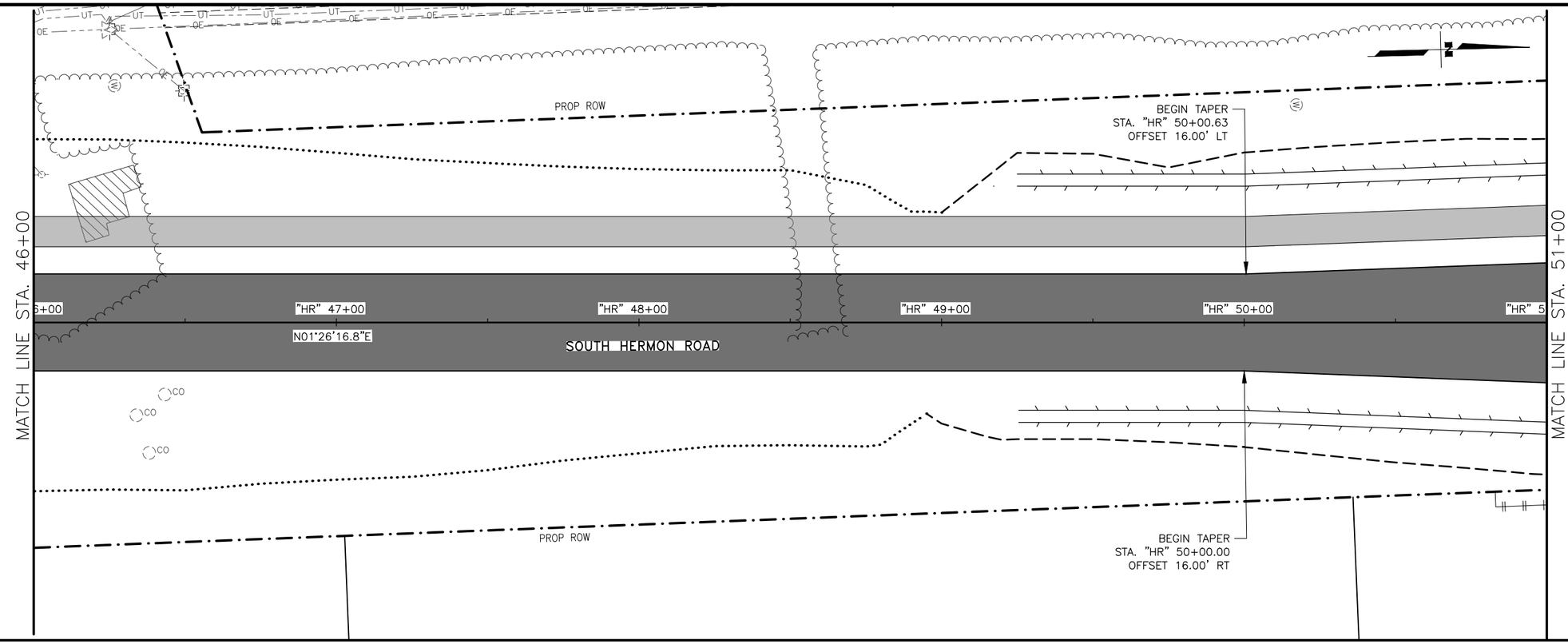

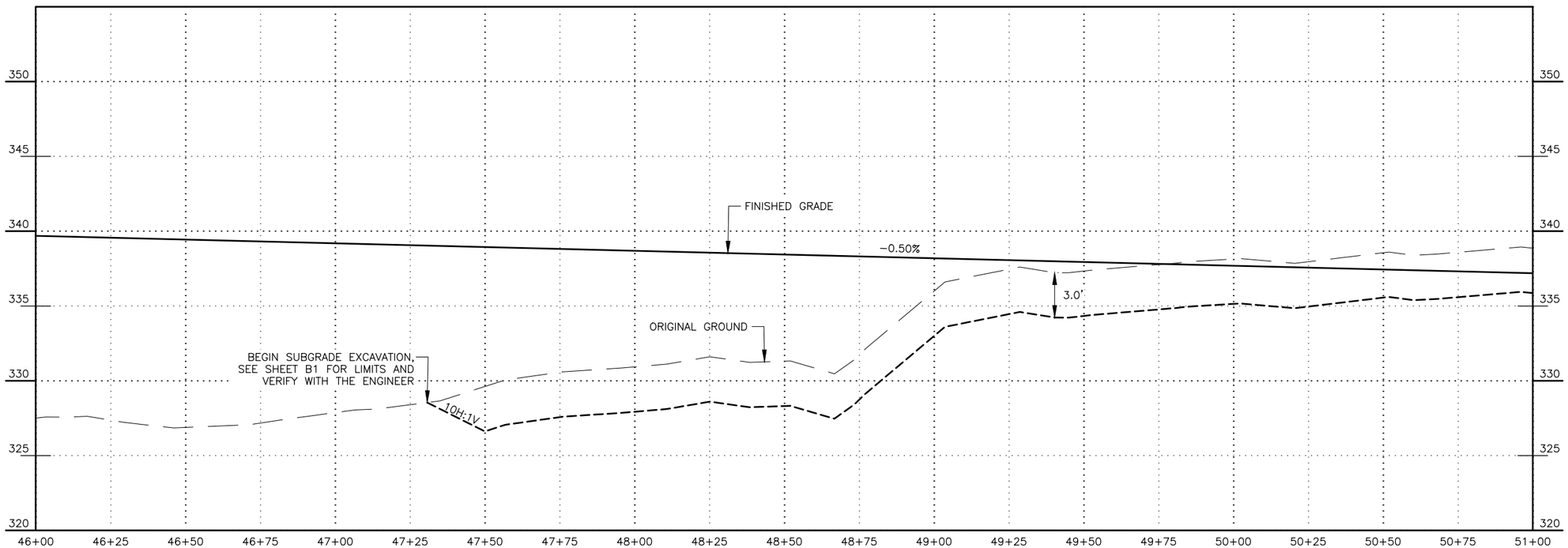

SHEET NO.	TOTAL SHEETS
F8	F14
STATE	YEAR
ALASKA	2027

PROJECT DESIGNATION
0001729/
CFHWY00799

NO.	REVISION
DATE	
NO.	REVISION
DATE	
NO.	REVISION
DATE	

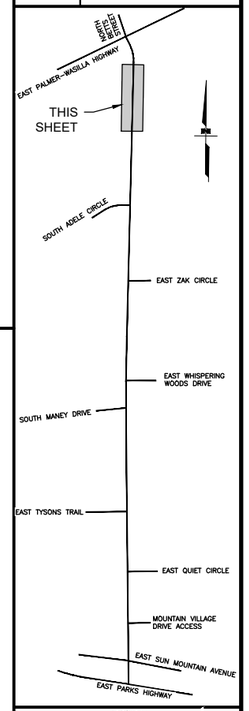

STATE OF ALASKA
PROFESSIONAL ENGINEER
PS&E REVIEW
AUGUST 2026

DOWL, LLC
5015 BUSINESS PARK BLVD
SUITE 4000
ANCHORAGE, AK 99503
(907) 562-2000
#AECL848 – AK

STATE OF ALASKA
DEPARTMENT OF TRANSPORTATION
AND PUBLIC FACILITIES

HERMON ROAD
PARKS HIGHWAY TO
PALMER–WASILLA HIGHWAY

HERMON ROAD STA
46+00 TO STA
51+00

DESIGNED BY JHK
CHECKED BY ST
DRAFTED BY JHK

SCALE: 1" = 20'

DATE TIME
8/7/2026 11:10 AM

DRAWING LOCATION
C:\DOWL_PW\00433398\00799_F_P&P.DWG

P.I. "HR" STA. 52+18.73
N = 146617.0984
E = 434416.5884
Δ = 027°09'35.6"
T = 60.39'
L = 118.51'
R = 250.00'
S = 2.0%
RUNOFF = 52.3'
RUNOUT = 52.3'
%RUNOFF = 67%
SUPERELEVATION EXTENDS TO EAST PALMER–WASILLA HIGHWAY AND SOUTH HERMON ROAD

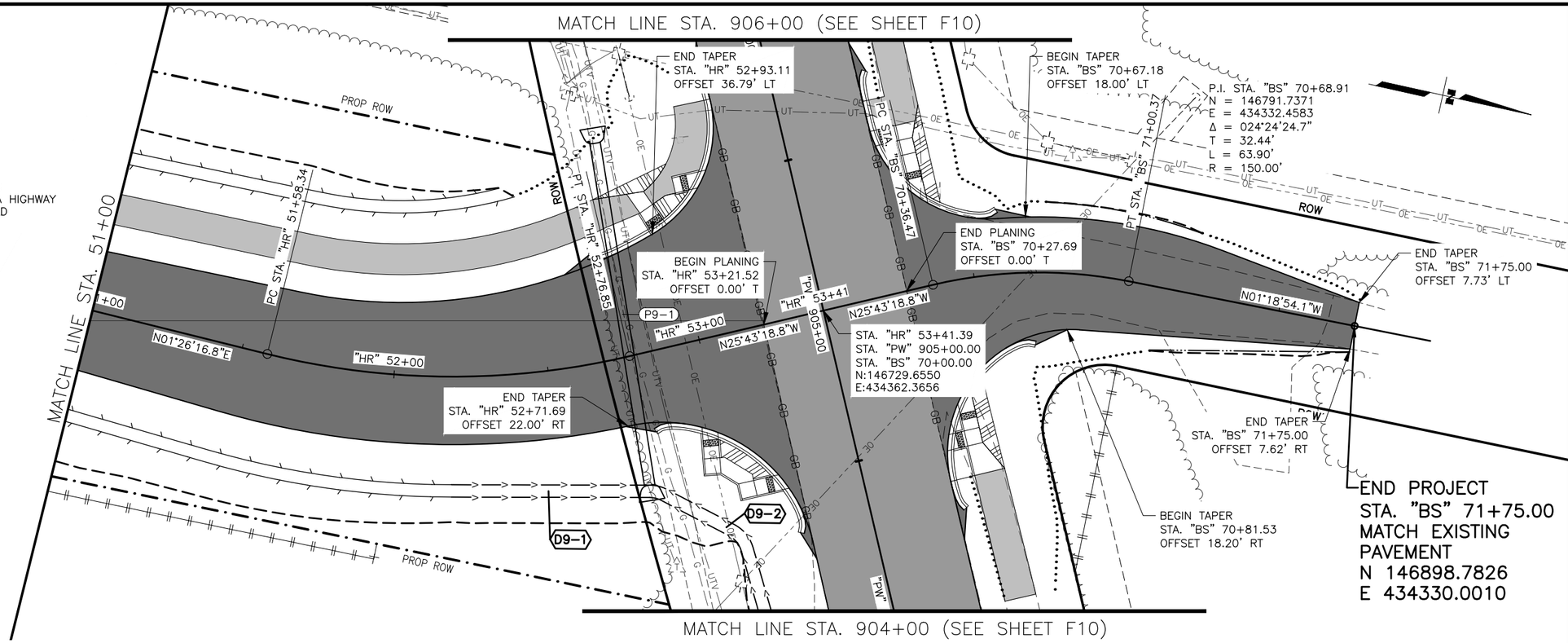

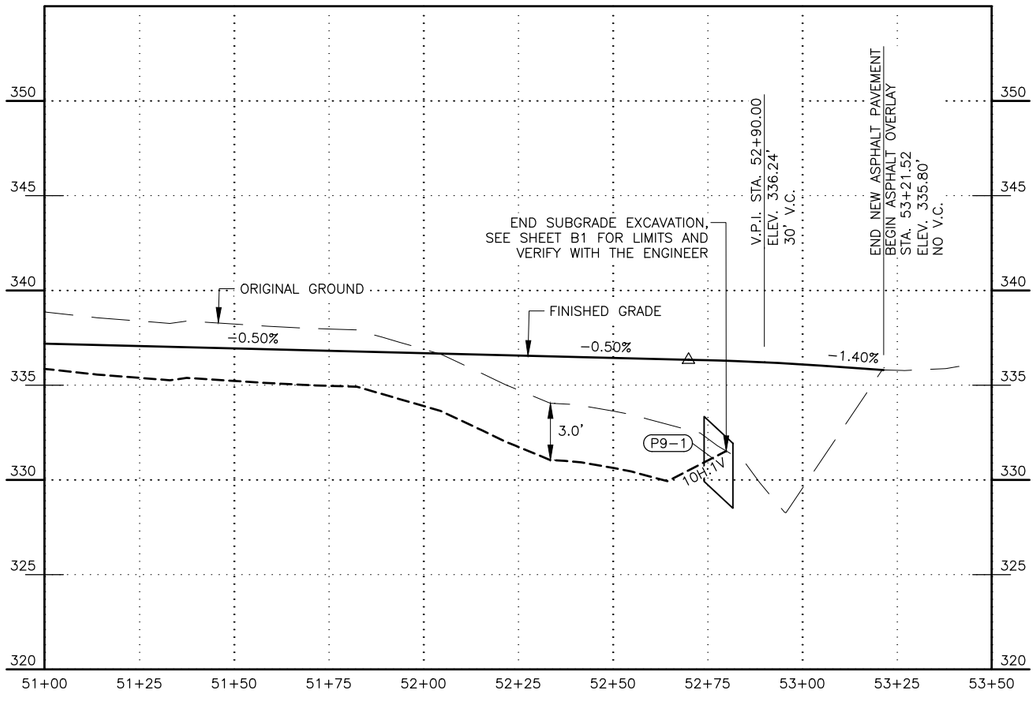

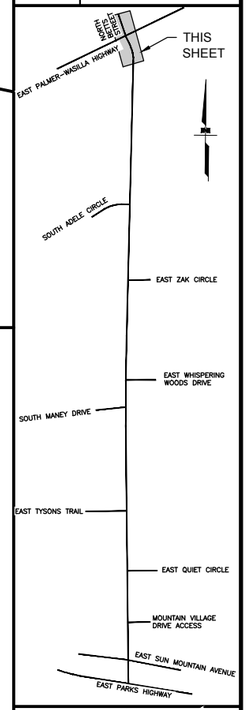

SHEET NO.	TOTAL SHEETS
F9	F14
STATE	YEAR
ALASKA	2027

PROJECT DESIGNATION
0001729/
CFHWY00799

NO.	REVISION
DATE	
NO.	REVISION
DATE	
NO.	REVISION
DATE	

PS&E REVIEW
AUGUST 2026

DOWL, LLC
5015 BUSINESS PARK BLVD
SUITE 4000
ANCHORAGE, AK 99503
(907) 562–2000
#AECL848 – AK

STATE OF ALASKA
DEPARTMENT OF TRANSPORTATION AND PUBLIC FACILITIES

HERMON ROAD
PARKS HIGHWAY TO
PALMER–WASILLA HIGHWAY

HERMON ROAD STA
51+00 TO STA
71+75

DESIGNED BY JHK
CHECKED BY ST
DRAFTED BY JHK
SCALE 1" = 20'
DATE TIME 8/7/2026 11:29 AM
DRAWING LOCATION C:\DOWL_PW\D0433398\00799_F_P&P.DWG

DESIGNED BY JHK
CHECKED BY ST
DRAFTED BY JHK

SCALE 1" = 20'

DATE 8/7/2026 TIME 11:11 AM

DRAWING LOCATION
C:\DOWL_PW\D0433398\00799_F_P&P.DWG

BEGIN TAPER
STA. "BS" 70+67.18
OFFSET 18.00' LT

BEGIN TAPER
STA. "BS" 70+81.53
OFFSET 18.20' RT

NORTH BETTS STREET

SEE SHEET F14

BEGIN PLANING
STA. "PW" 902+95.95
MATCH EXISTING PAVEMENT
N 146818.2140
E 434546.1978

END PLANING
STA. "PW" 907+18.96
MATCH EXISTING PAVEMENT
N 146634.6245
E 434165.1059

PC STA. "BS" 70+36.47

N25°43'18.8"W

EAST PALMER–WASILLA HIGHWAY

"PW" 908+00 "PW" 907+00 "PW" 906+00 "PT" 905+53+41 "HR" "PW" 905+00 "PW" 904+00 "PW" 903+00

END TAPER
STA. "HR" 52+93.11
OFFSET 36.79' LT

"HR" 53+00

D9-2

P10-1

P9-1

PT STA. "HR" 52+76.85

NORTH TRENT CIRCLE

END TAPER
STA. "HR" 52+71.69
OFFSET 22.00' RT

ROW

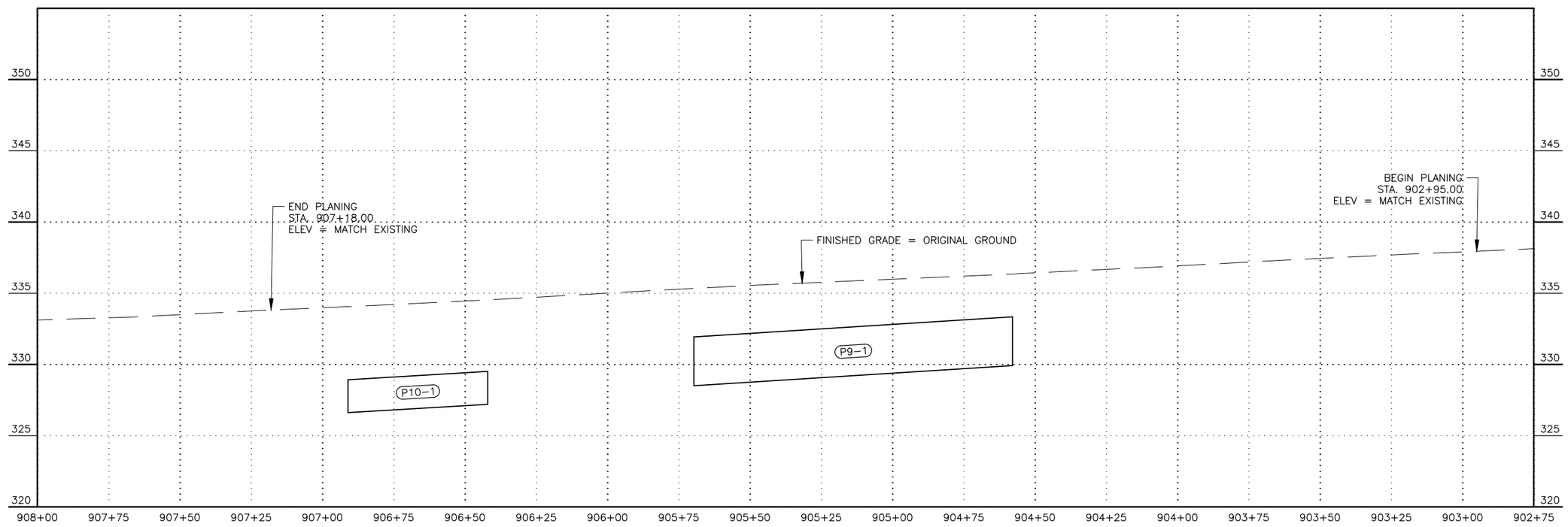

SHEET NO.	TOTAL SHEETS
F10	F14
STATE	YEAR
ALASKA	2027

PROJECT DESIGNATION
0001729/
CFHWY00799

NO.	REVISION
DATE	
NO.	REVISION
DATE	
NO.	REVISION
DATE	

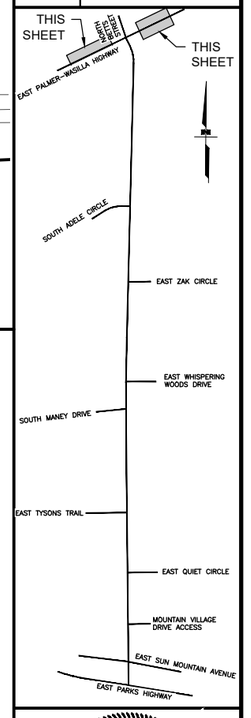

STATE OF AL
PS&E REVIEW
AUGUST 2026
PROFESSIONAL ENGINEER

DOWL, LLC
5015 BUSINESS PARK BLVD
SUITE 4000
ANCHORAGE, AK 99503
(907) 562–2000
#AECL848 – AK

STATE OF ALASKA
DEPARTMENT OF TRANSPORTATION
AND PUBLIC FACILITIES

HERMON ROAD
PARKS HIGHWAY TO
PALMER–WASILLA HIGHWAY

E. PALMER–WASILLA HWY

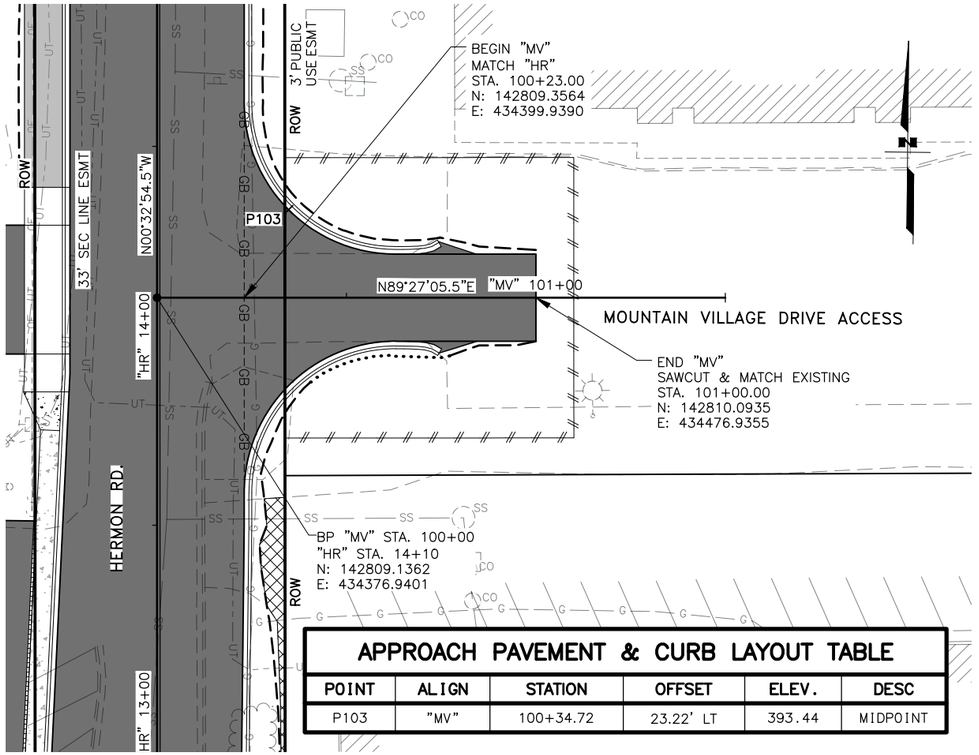

APPROACH PAVEMENT & CURB LAYOUT TABLE					
POINT	ALIGN	STATION	OFFSET	ELEV.	DESC
P103	"MV"	100+34.72	23.22' LT	393.44	MIDPOINT

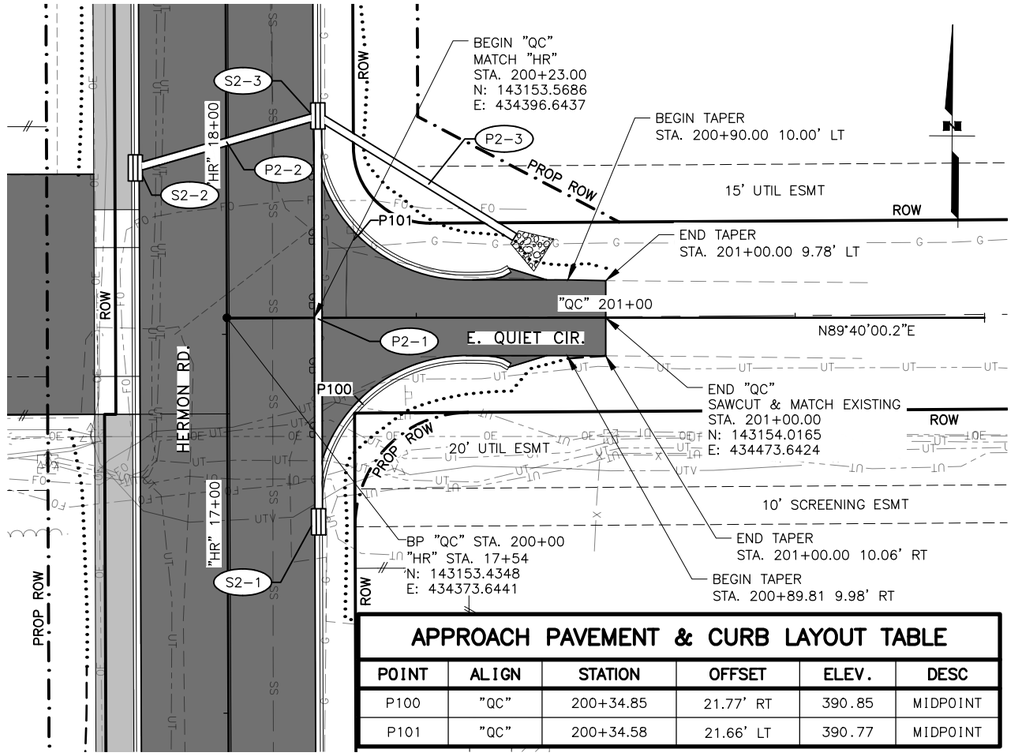

APPROACH PAVEMENT & CURB LAYOUT TABLE					
POINT	ALIGN	STATION	OFFSET	ELEV.	DESC
P100	"QC"	200+34.85	21.77' RT	390.85	MIDPOINT
P101	"QC"	200+34.58	21.66' LT	390.77	MIDPOINT

SHEET NO.	TOTAL SHEETS
F11	F14
STATE	YEAR
ALASKA	2027
PROJECT DESIGNATION	
0001729/ CFHWY00799	

NO.	REVISION
DATE	
NO.	REVISION
DATE	
NO.	REVISION
DATE	

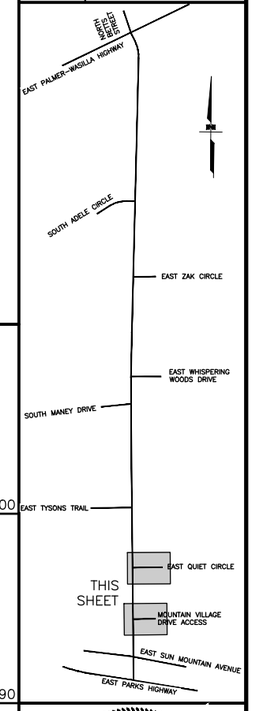

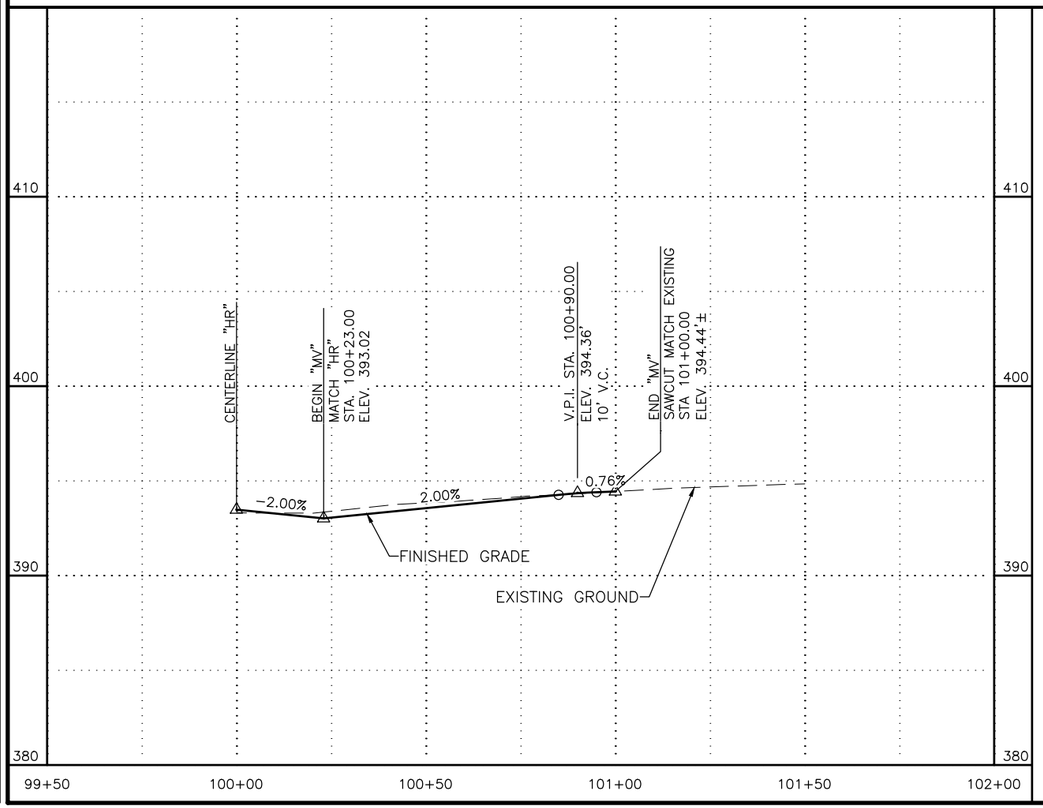

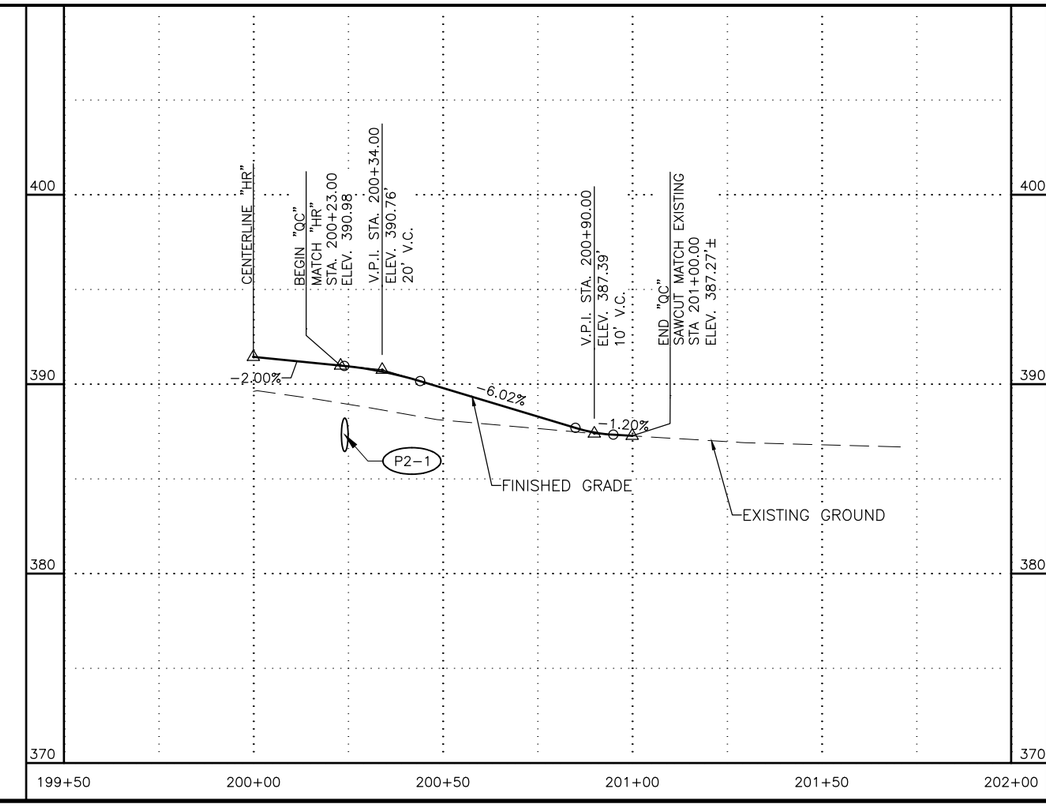

PS&E REVIEW AUGUST 2026

PLANS DEVELOPED BY:
LOUNSBURY & ASSOCIATES INC.
3230 C ST, SUITE 201,
ANCHORAGE, AK 99503
(907)272-5451
CERTIFICATE OF AUTHORITY NO. AECC391

STATE OF ALASKA
DEPARTMENT OF TRANSPORTATION
AND PUBLIC FACILITIES

HERMON ROAD PARKS HIGHWAY TO PALMER-WASILLA HIGHWAY

MOUNTAIN VILLAGE DRIVE AND QUIET CIRCLE

DRAWING LOCATION
C:\DOWL_PW\D0415158\PL-00799_F-APPROACH.DWG

DATE 8/7/2026 TIME 11:11 AM
SCALE 1" = 20'
AH SA DJ

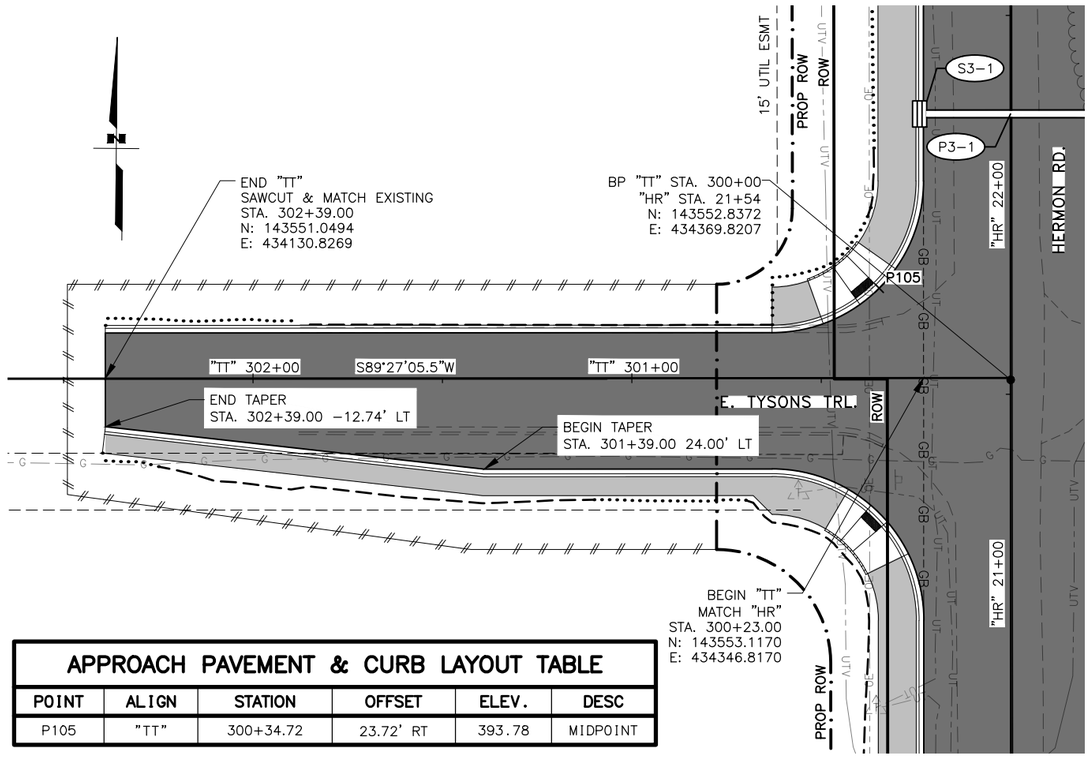

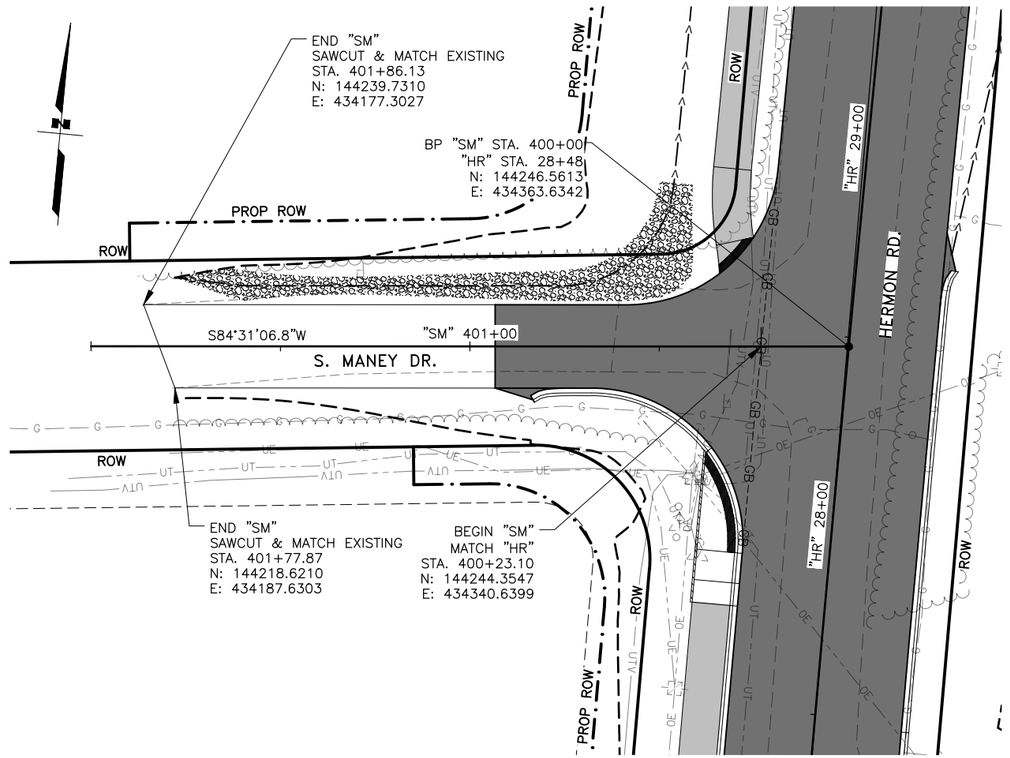

APPROACH PAVEMENT & CURB LAYOUT TABLE

POINT	ALIGN	STATION	OFFSET	ELEV.	DESC
P105	"TT"	300+34.72	23.72' RT	393.78	MIDPOINT

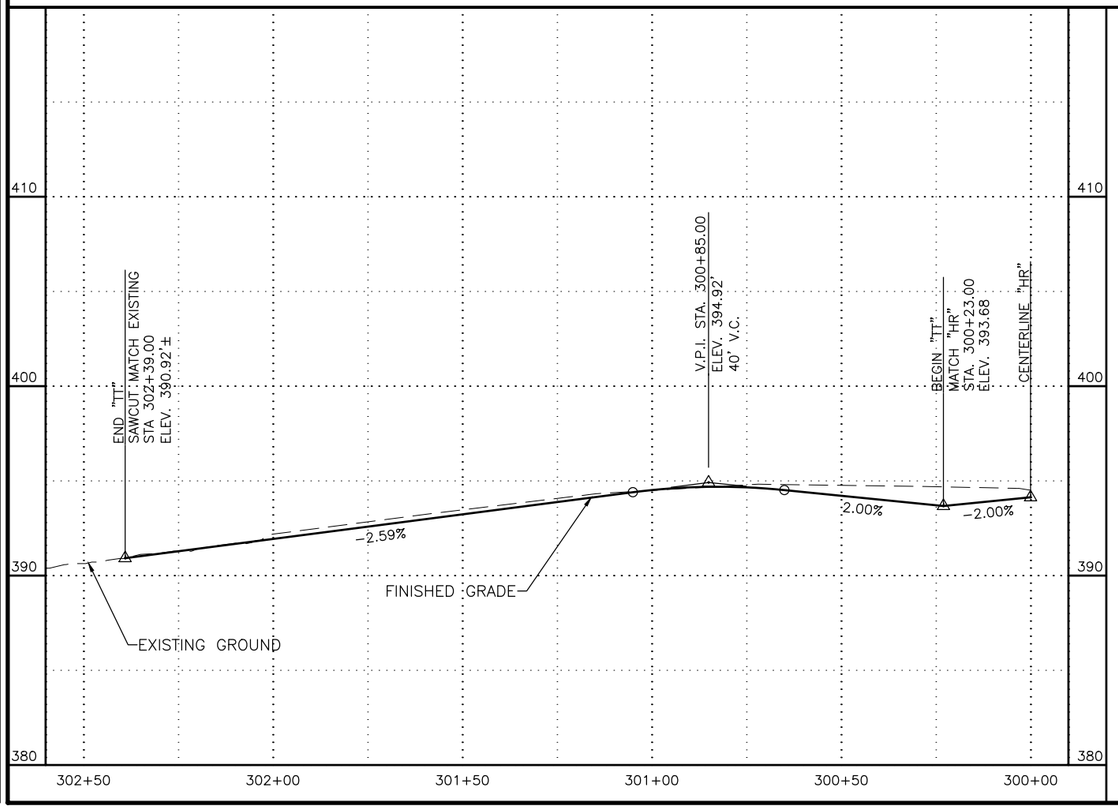

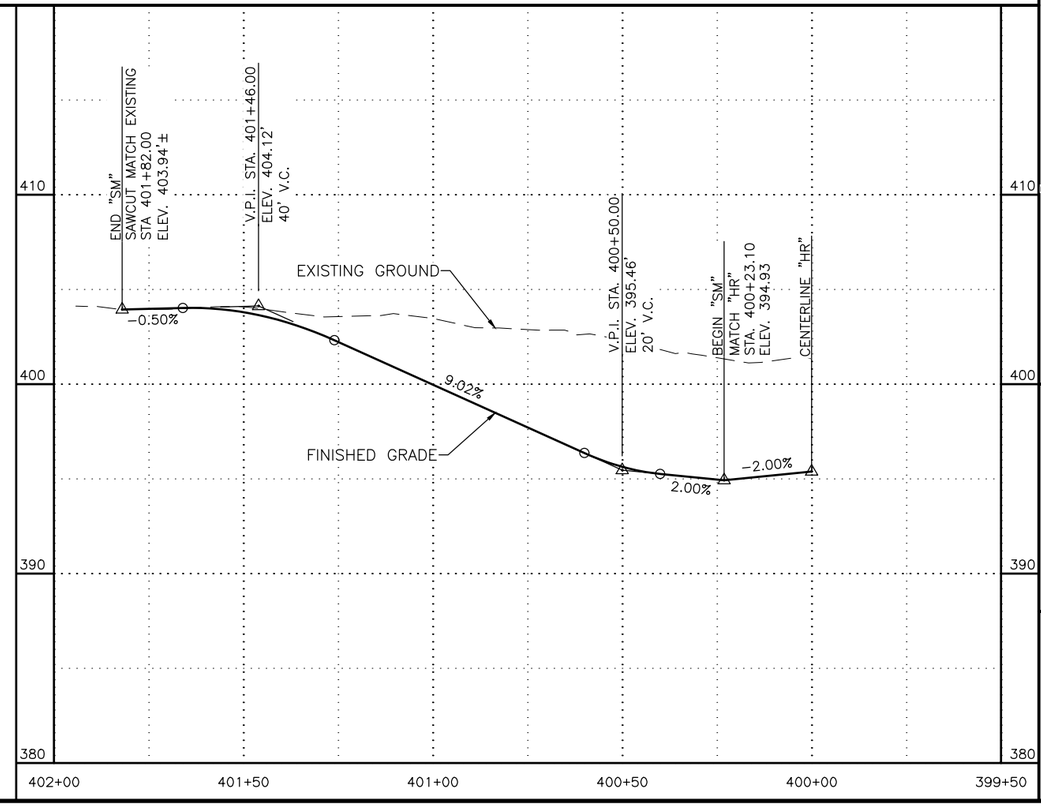

SHEET NO.	TOTAL SHEETS
F12	F14
STATE	YEAR
ALASKA	2027

PROJECT DESIGNATION
0001729/
CFHWY00799

NO.	REVISION
DATE	
NO.	REVISION
DATE	
NO.	REVISION
DATE	

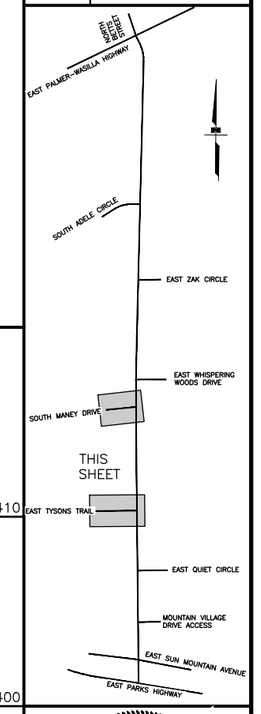

STATE OF AL
PS&E REVIEW
AUGUST 2026
PROFESSIONAL ENGINEER

PLANS DEVELOPED BY:
LOUNSBURY & ASSOCIATES INC.
3230 C ST, SUITE 201,
ANCHORAGE, AK 99503
(907)272-5451
CERTIFICATE OF AUTHORITY NO. AECC391

STATE OF ALASKA
DEPARTMENT OF TRANSPORTATION
AND PUBLIC FACILITIES

HERMON ROAD
PARKS HIGHWAY TO PALMER-WASILLA HIGHWAY

E. TYSONS TRAIL AND NEW MANEY DRIVE

DRAWING LOCATION
C:\DOWL_PW\D0415158\PL-00799_F-APPROACH.DWG

DATE 8/7/2026 TIME 11:11 AM
SCALE 1" = 20'
AH SA DJ

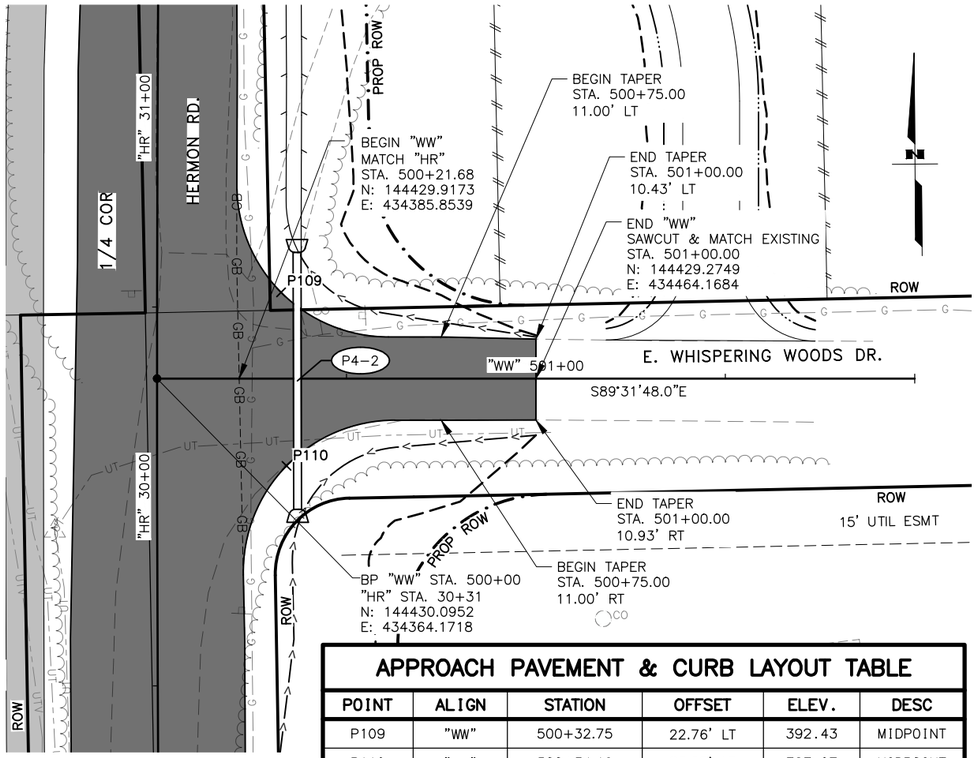

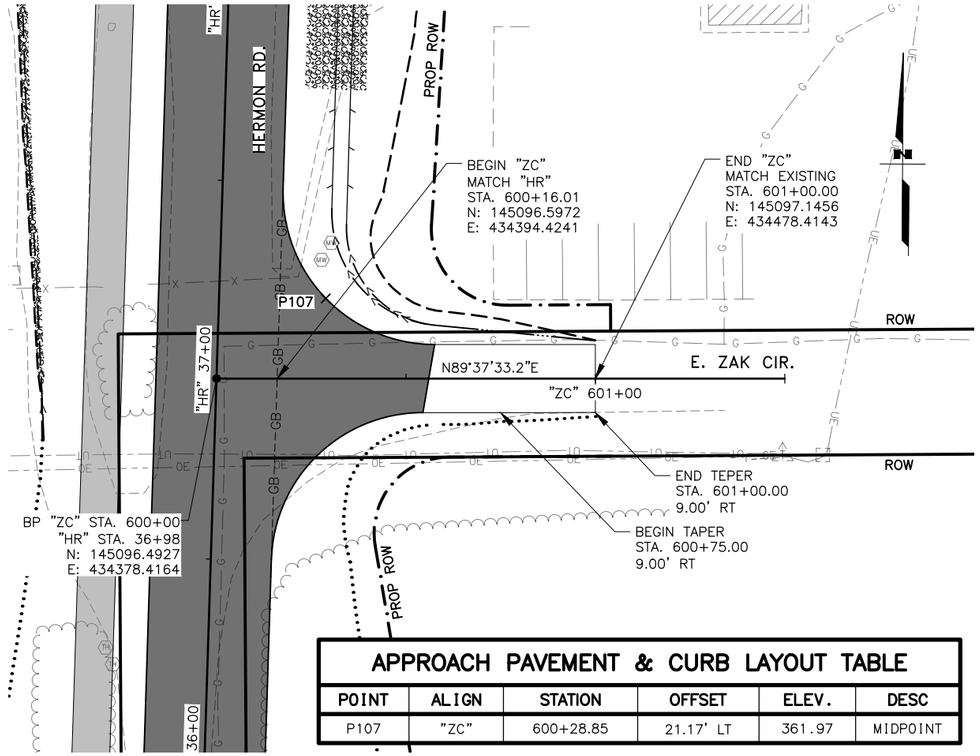

APPROACH PAVEMENT & CURB LAYOUT TABLE

POINT	ALIGN	STATION	OFFSET	ELEV.	DESC
P109	"WW"	500+32.75	22.76' LT	392.43	MIDPOINT
P110	"WW"	500+34.19	23.02' LT	393.07	MIDPOINT

APPROACH PAVEMENT & CURB LAYOUT TABLE

POINT	ALIGN	STATION	OFFSET	ELEV.	DESC
P107	"ZC"	600+28.85	21.17' LT	361.97	MIDPOINT

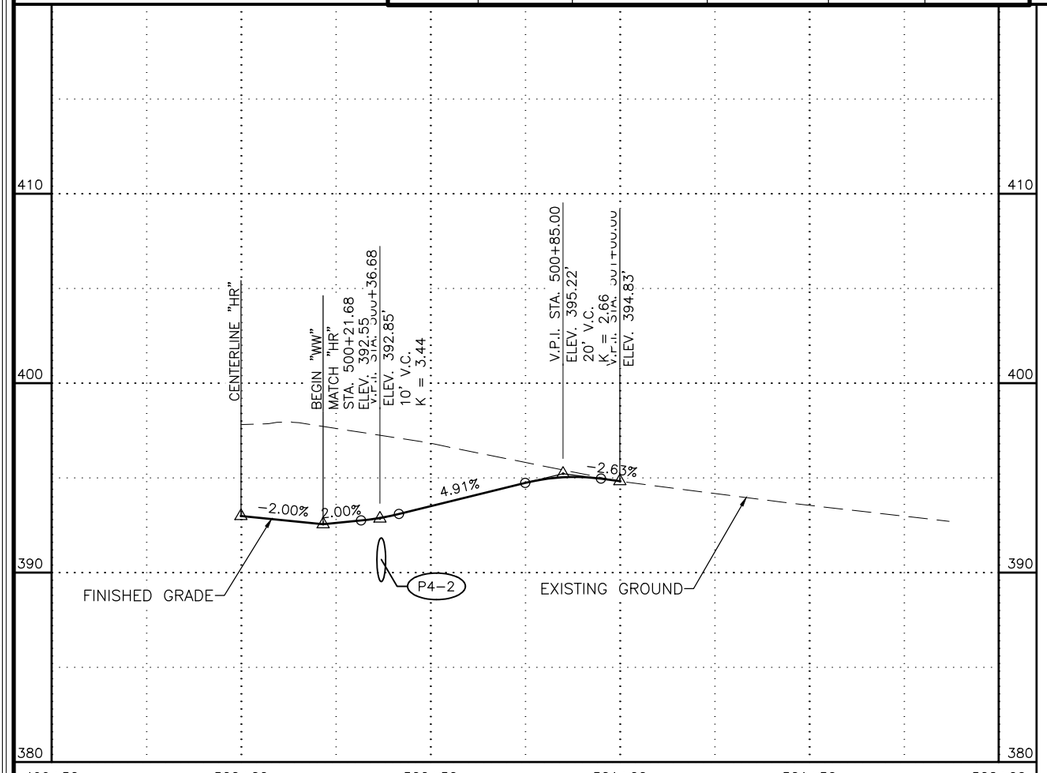

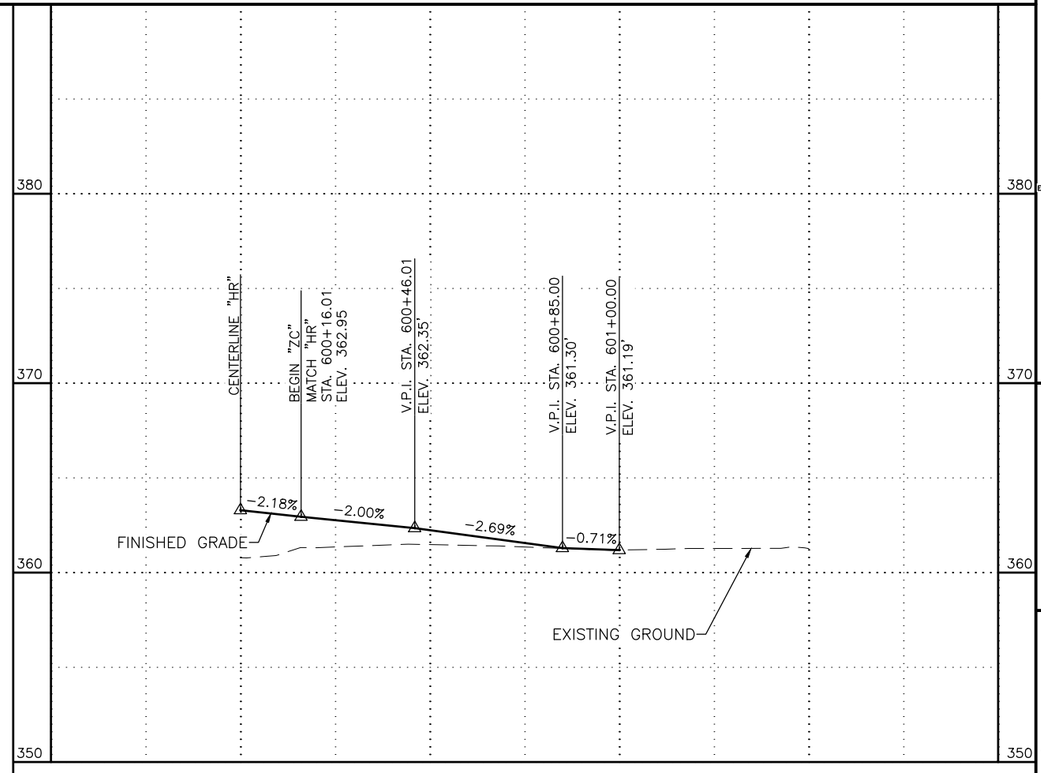

SHEET NO.	TOTAL SHEETS
F13	F14
STATE	YEAR
ALASKA	2027

PROJECT DESIGNATION

0001729/
CFHWY00799

NO.	REVISION
DATE	
NO.	REVISION
DATE	
NO.	REVISION
DATE	

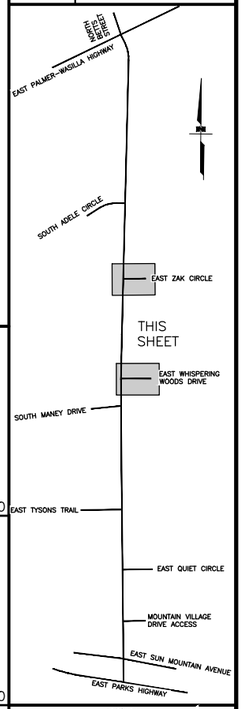

STATE OF ALASKA
PROFESSIONAL ENGINEER
PS&E REVIEW
AUGUST 2026

PLANS DEVELOPED BY:
LOUNSBURY & ASSOCIATES INC.
3230 C ST, SUITE 201,
ANCHORAGE, AK 99503
(907)272-5451
CERTIFICATE OF AUTHORITY NO. AECC391

STATE OF ALASKA
DEPARTMENT OF TRANSPORTATION
AND PUBLIC FACILITIES

HERMON ROAD
PARKS HIGHWAY TO
PALMER-WASILLA HIGHWAY
E. WHISPERING WOODS DRIVE AND E ZAK CIRCLE

DATE 8/7/2026 TIME 11:11 AM
SCALE 1" = 20'
AH SA DJ

DRAWING LOCATION
C:\DOWL_PW\D0415158\PL-00799_F-APPROACH.DWG

AH	SA	DJ

SCALE: 1" = 20'

DATE: 8/7/2026 TIME: 11:11 AM

DRAWING LOCATION
C:\DOWL_PW\D0415158\PL-00799_F-APPROACH.DWG

APPROACH PAVEMENT & CURB LAYOUT TABLE

POINT	ALIGN	STATION	OFFSET	ELEV.	DESC
P111	"AC"	700+33.74	18.76' RT	343.80	EOP
P112	"AC"	700+27.76	23.68' LT	345.02	MIDPOINT

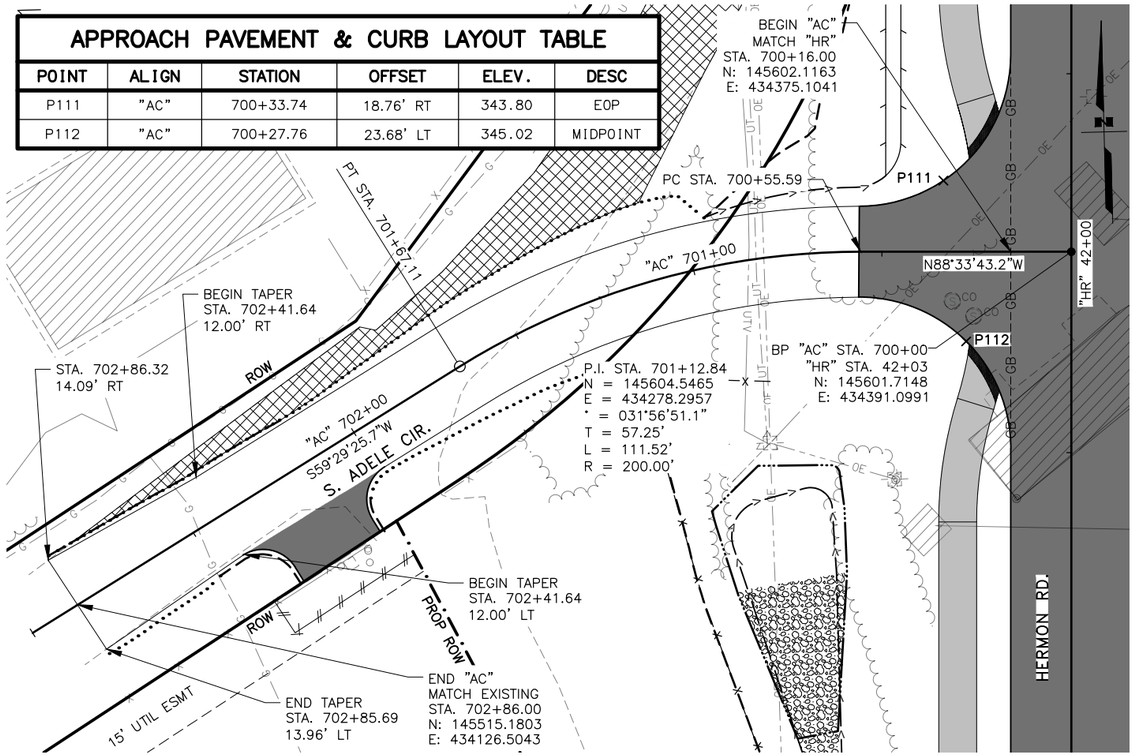

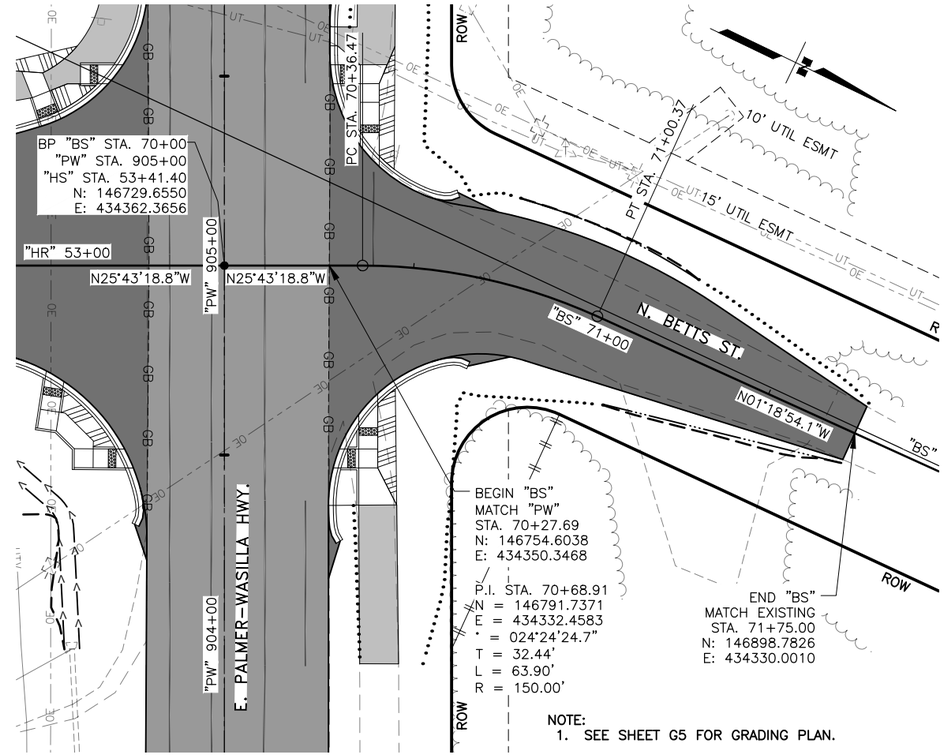

NOTE:
1. SEE SHEET G5 FOR GRADING PLAN.

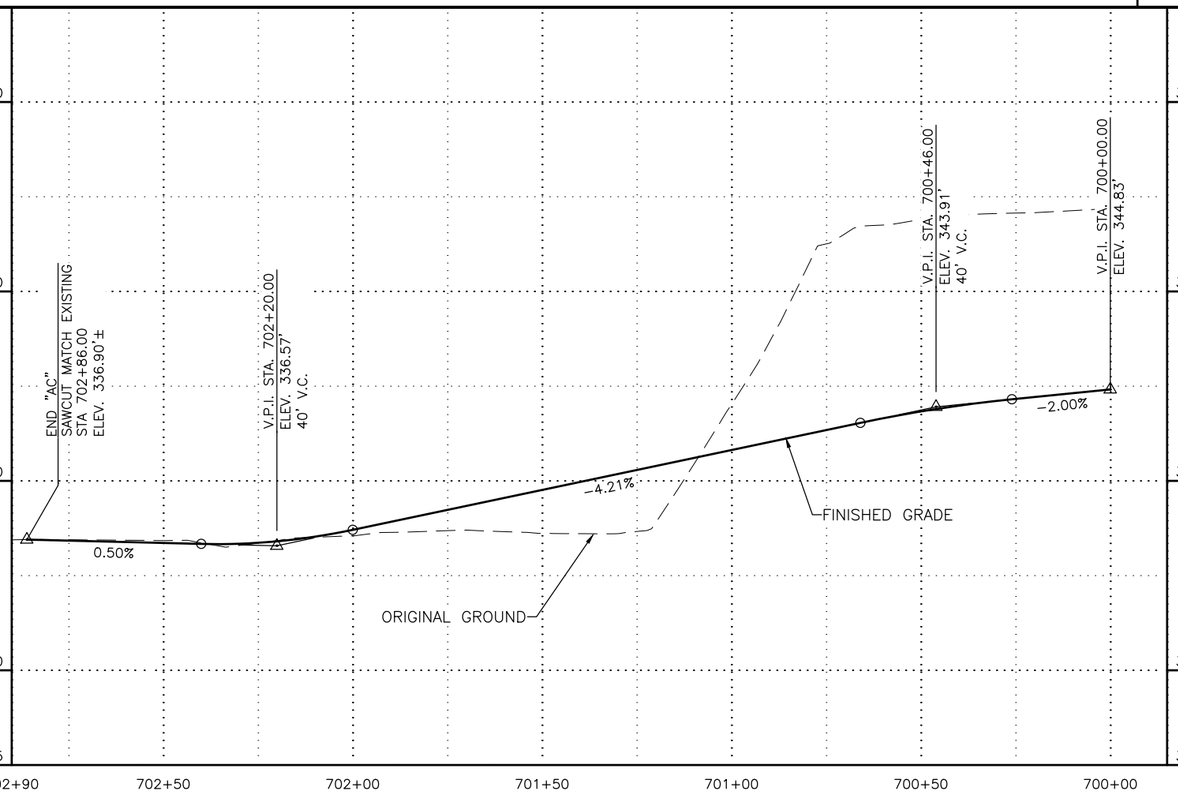

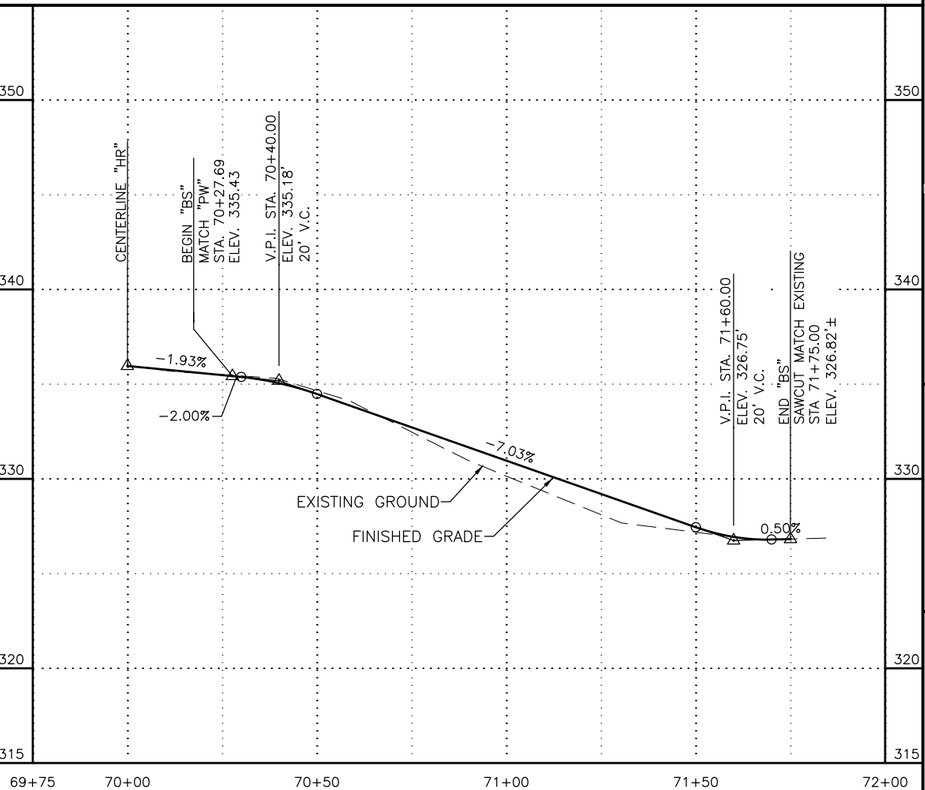

SHEET NO.	TOTAL SHEETS
F14	F14
STATE	YEAR
ALASKA	2027

PROJECT DESIGNATION
0001729/
CFHWY00799

NO.	REVISION
DATE	
NO.	REVISION
DATE	
NO.	REVISION
DATE	

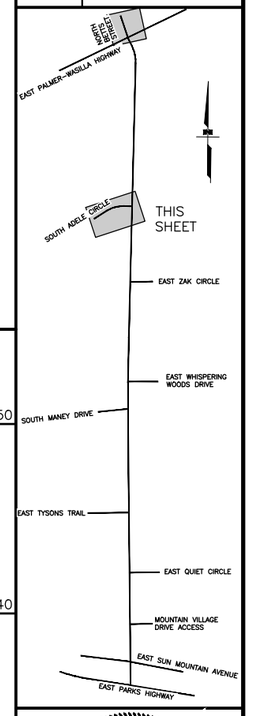

STATE OF ALASKA
PS&E REVIEW
AUGUST 2026
PROFESSIONAL ENGINEER

PLANS DEVELOPED BY:
LOUNSBURY & ASSOCIATES INC.
3230 C ST, SUITE 201,
ANCHORAGE, AK 99503
(907)272-5451
CERTIFICATE OF AUTHORITY NO. AECC391

STATE OF ALASKA
DEPARTMENT OF TRANSPORTATION
AND PUBLIC FACILITIES

HERMON ROAD
PARKS HIGHWAY TO
PALMER-WASILLA HIGHWAY

ADELE CIRCLE AND
N. BETTS DRIVE

DRAWING LOCATION
C:\DOWL_PW\0043398\00799_FD.DWG

DATE	TIME
8/7/2026	11:12 AM

SCALE
1" = 20'

DESIGNED BY	JHK
CHECKED BY	ST
DRAFTED BY	JHK

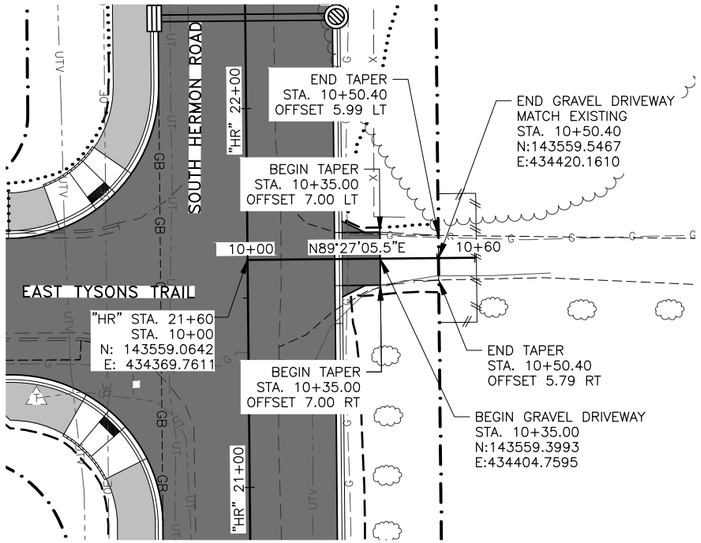

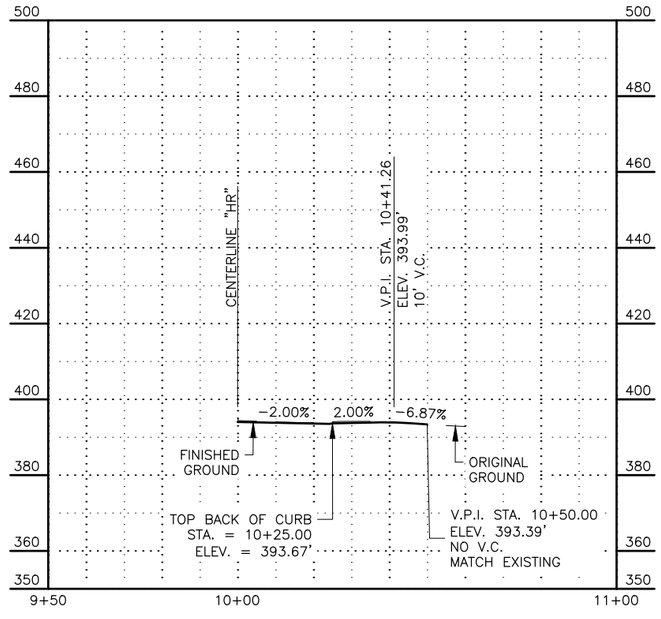

DRIVEWAY @
STA "HR" 21+60
RIGHT

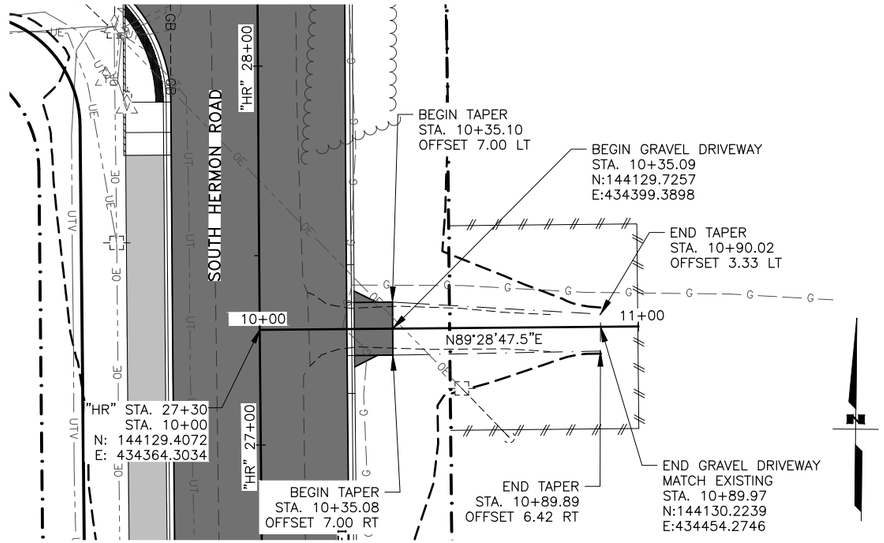

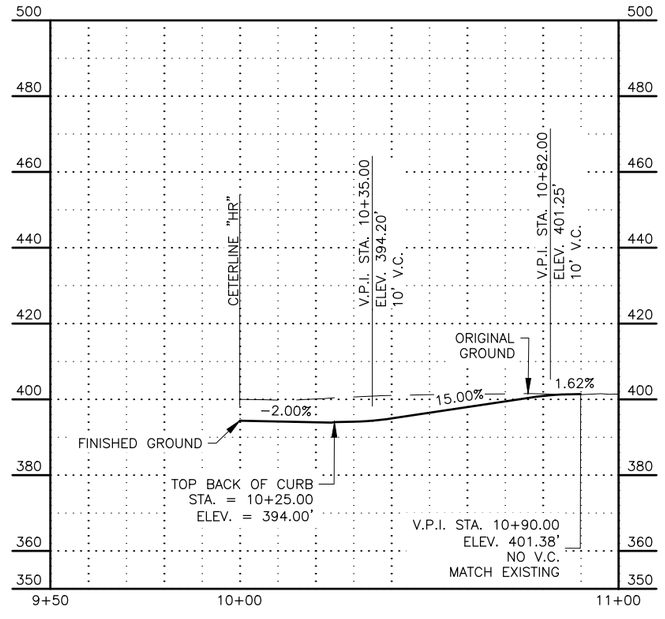

DRIVEWAY @
STA "HR" 27+31
RIGHT

SHEET NO.	TOTAL SHEETS
FD1	FD3
STATE	YEAR
ALASKA	2027

PROJECT DESIGNATION
0001729/
CFHWY00799

NO.	REVISION
DATE	
NO.	REVISION
DATE	
NO.	REVISION
DATE	

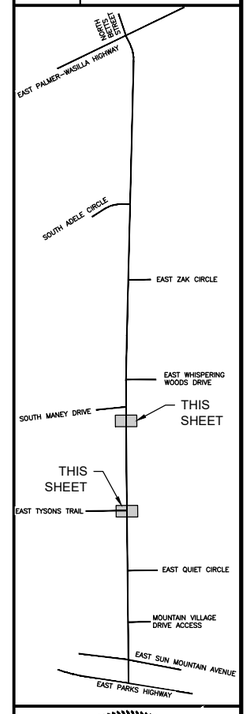

STATE OF ALASKA
PS&E REVIEW
AUGUST 2026
PROFESSIONAL ENGINEER

DOWL, LLC
5015 BUSINESS PARK BLVD
SUITE 4000
ANCHORAGE, AK 99503
(907) 562-2000
#AECL848 - AK

STATE OF ALASKA
DEPARTMENT OF TRANSPORTATION
AND PUBLIC FACILITIES

HERMON ROAD
PARKS HIGHWAY TO
PALMER-WASILLA HIGHWAY

DRIVEWAY PLANS AND PROFILES

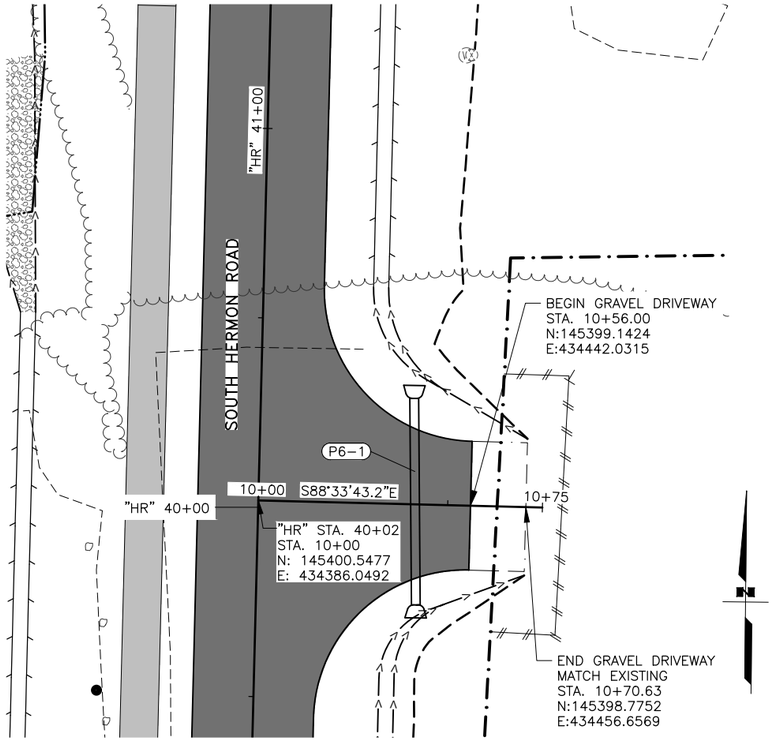

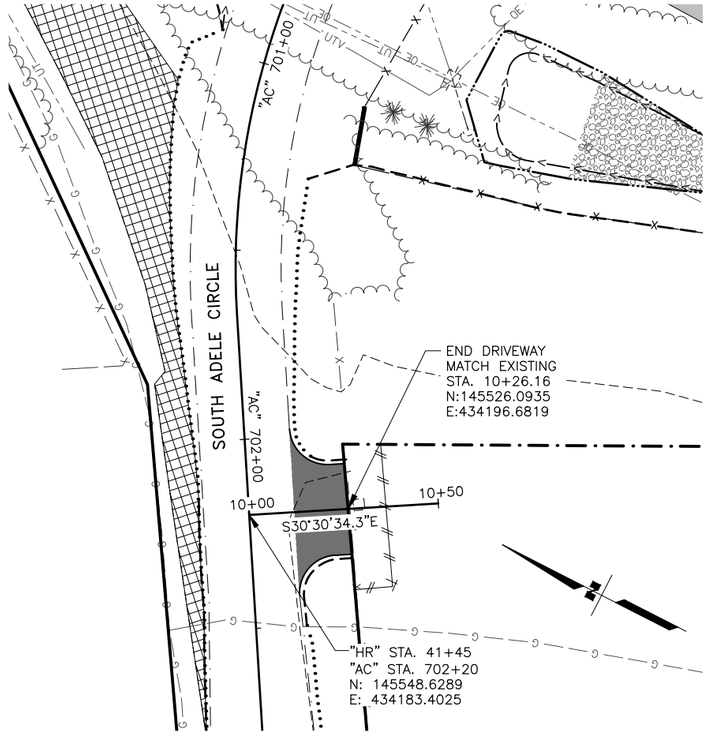

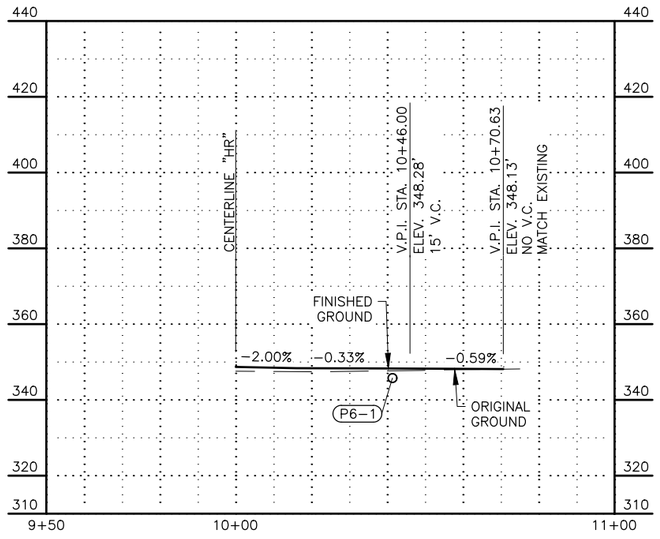

DRIVEWAY @
STA "HR" 40+02
RIGHT

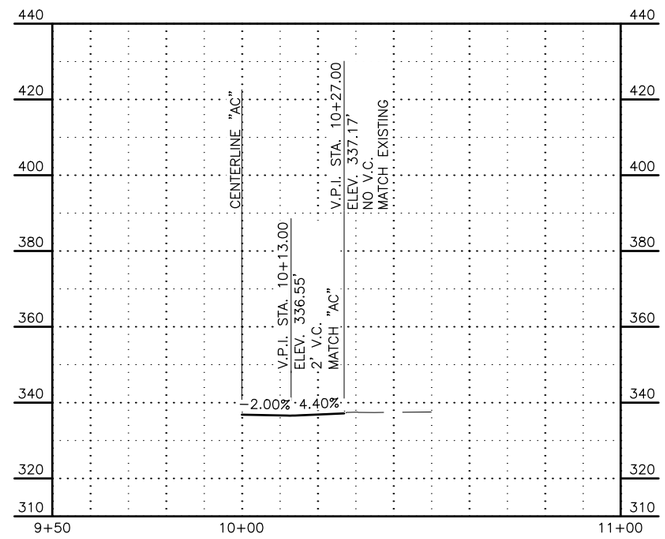

DRIVEWAY @
STA "AC" 702+20
LEFT

SHEET NO.	TOTAL SHEETS
FD2	FD3
STATE	YEAR
ALASKA	2027

PROJECT DESIGNATION
0001729/
CFHWY00799

NO.	REVISION
DATE	
NO.	REVISION
DATE	
NO.	REVISION
DATE	

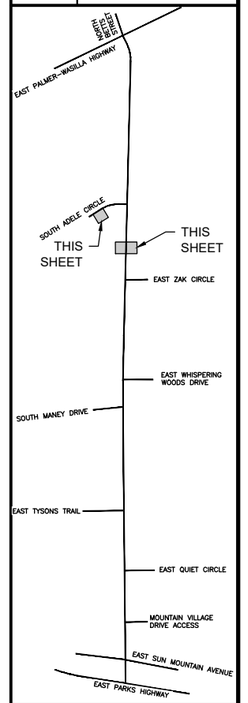

STATE OF AL
PS&E REVIEW
AUGUST 2026
PROFESSIONAL ENGINEER

DOWL, LLC
5015 BUSINESS PARK BLVD
SUITE 4000
ANCHORAGE, AK 99503
(907) 562-2000
#AECL848 - AK

STATE OF ALASKA
DEPARTMENT OF TRANSPORTATION
AND PUBLIC FACILITIES

HERMON ROAD
PARKS HIGHWAY TO
PALMER-WASILLA HIGHWAY

DRIVEWAY PLANS AND PROFILES

DESIGNED BY	JHK
CHECKED BY	ST
DRAFTED BY	JHK

SCALE: 1" = 20'

DATE TIME
8/7/2026 11:12 AM

DRAWING LOCATION
C:\DOWL_PW\00433398\00799_FD.DWG

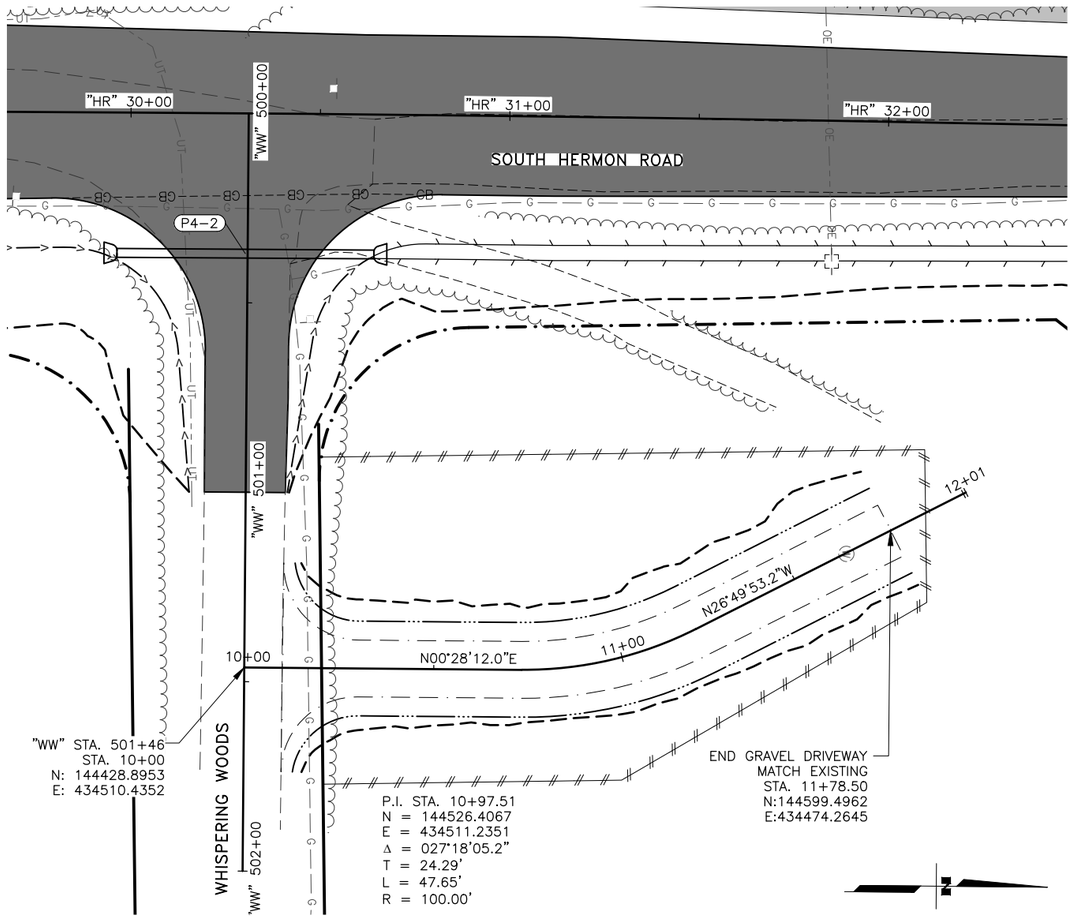

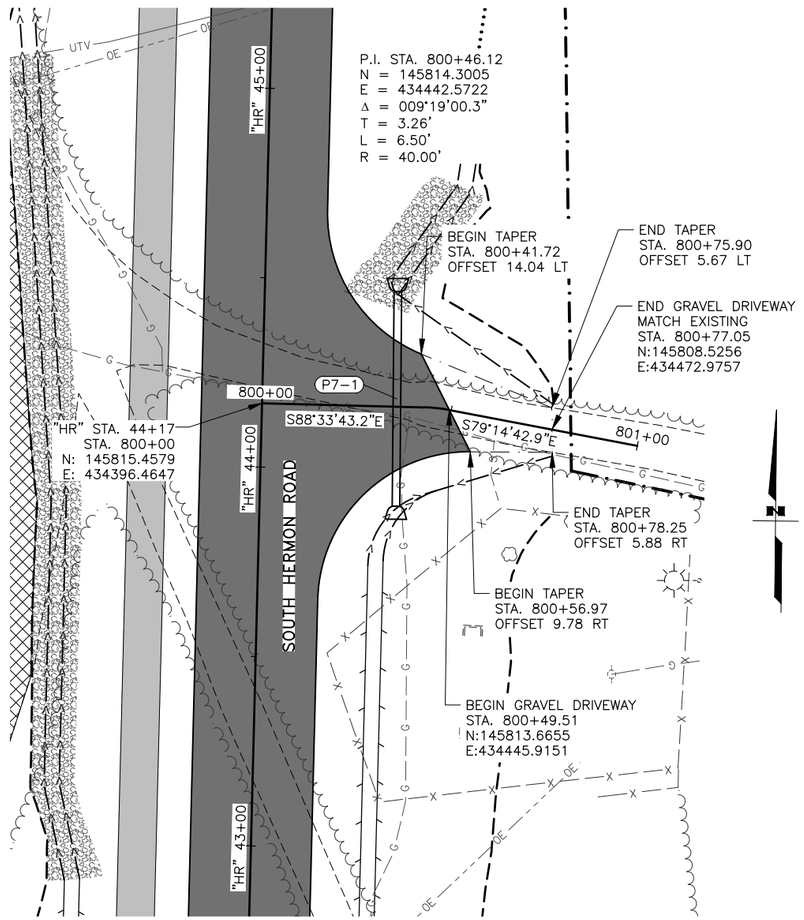

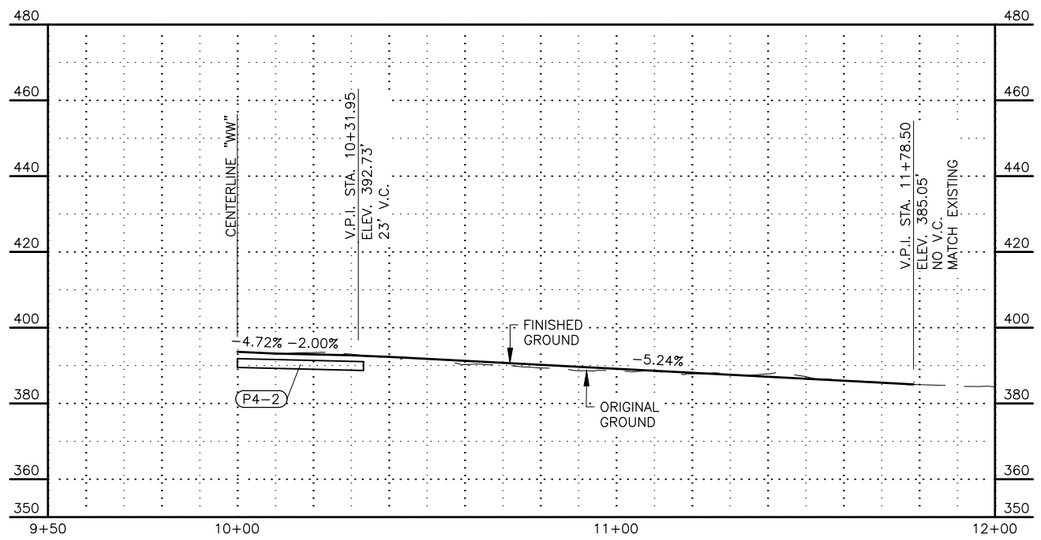

DRIVEWAY @
STA "HR" 21+60
RIGHT

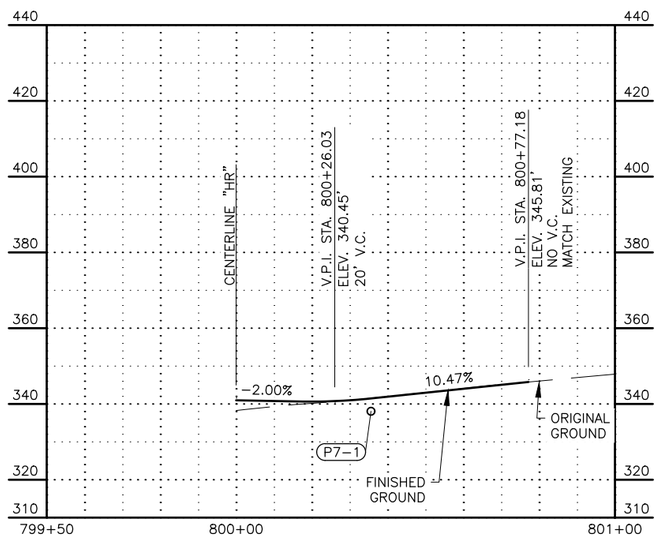

DRIVEWAY @
STA "HR" 44+19
RIGHT

SHEET NO.	TOTAL SHEETS
FD3	FD3
STATE	YEAR
ALASKA	2027

PROJECT DESIGNATION
0001729/
CFHWY00799

NO.	REVISION
DATE	
NO.	REVISION
DATE	
NO.	REVISION
DATE	

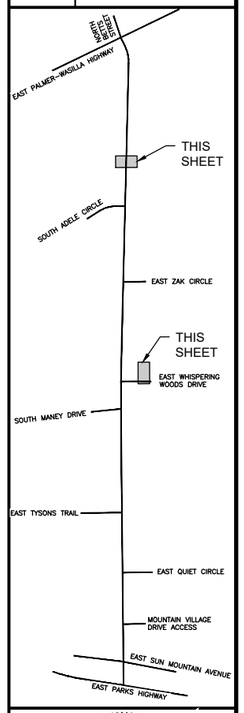

STATE OF ALASKA
PS&E REVIEW
AUGUST 2026
PROFESSIONAL ENGINEER

DOWL, LLC
5015 BUSINESS PARK BLVD
SUITE 4000
ANCHORAGE, AK 99503
(907) 562-2000
#AECL848 - AK

STATE OF ALASKA
DEPARTMENT OF TRANSPORTATION
AND PUBLIC FACILITIES

HERMON ROAD
PARKS HIGHWAY TO
PALMER-WASILLA HIGHWAY

DRIVEWAY PLANS AND PROFILES

DESIGNED BY JHK
CHECKED BY ST
DRAFTED BY JHK
SCALE 1" = 20'
DATE 8/7/2026 TIME 11:12 AM

DRAWING LOCATION
C:\DOWL_PW\00433398\00799_FD.DWG

NO.	DATE	REVISION

STATE	PROJECT DESIGNATION	YEAR	SHEET NO.	TOTAL SHEETS
ALASKA	0001729/CFHWY00799	2027	G1	G9

DESIGNED BY SRT
CHECKED BY KLK
DRAFTED BY JHK

SCALE: 1" = 100'

DATE TIME
8/7/2026 11:12 AM

DRAWING LOCATION
C:\DOWL_PW\0043398\00799_G1.DWG

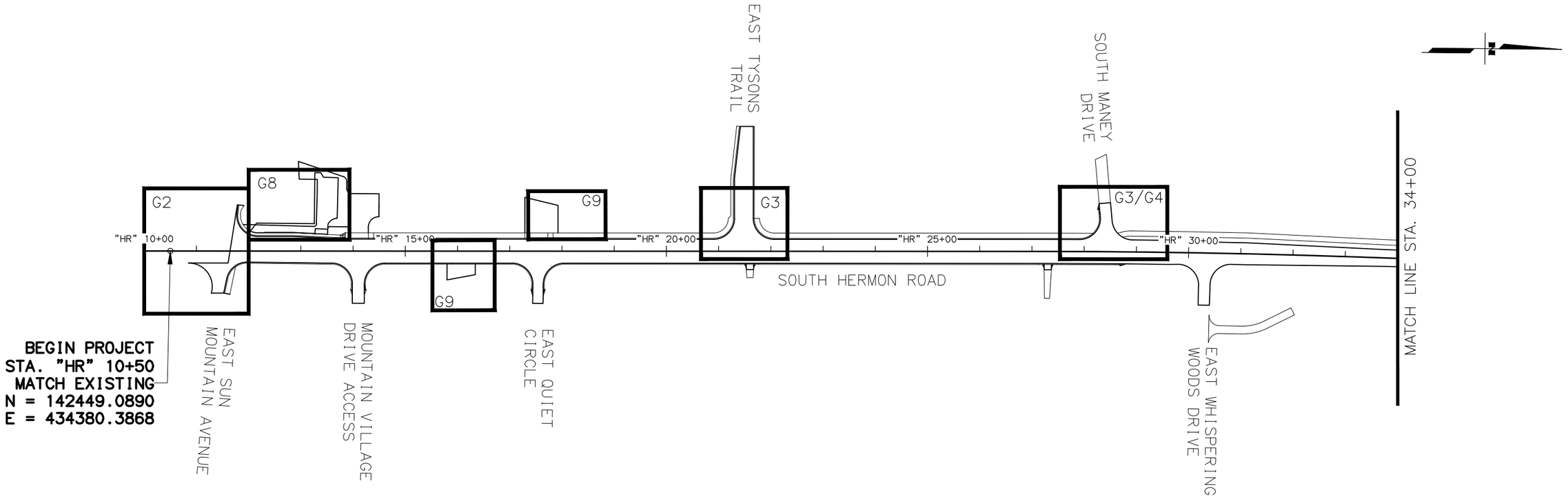

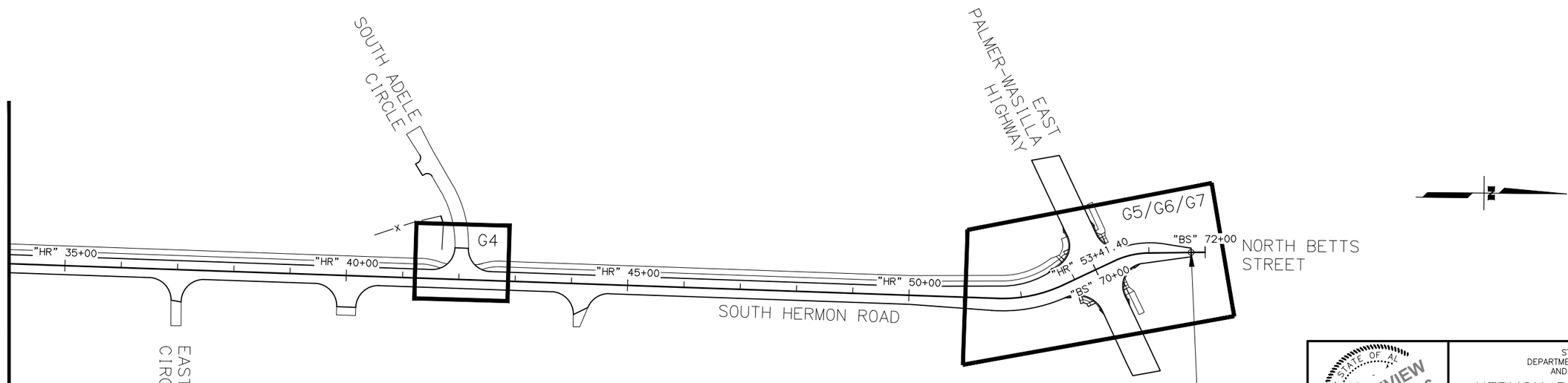

PS&E REVIEW
AUGUST 2026

DOWL, LLC
5015 BUSINESS PARK BLVD
SUITE 4000
ANCHORAGE, AK 99503
(907) 562-2000
#AECL848 - AK

STATE OF ALASKA
DEPARTMENT OF TRANSPORTATION
AND PUBLIC FACILITIES

HERMON RD EXTENSION AND UPGRADE, PARKS HWY TO PALMER-WASILLA HWY

GRADING PLAN SHEET LAYOUT

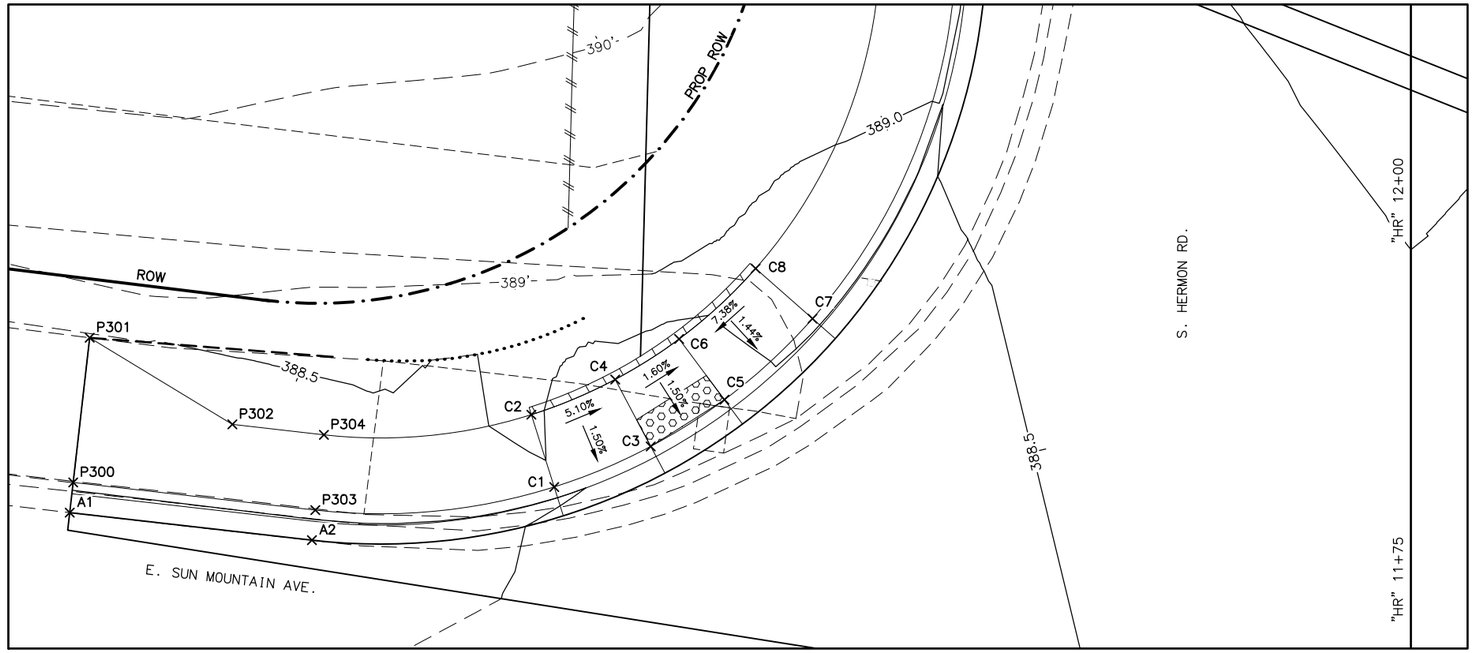

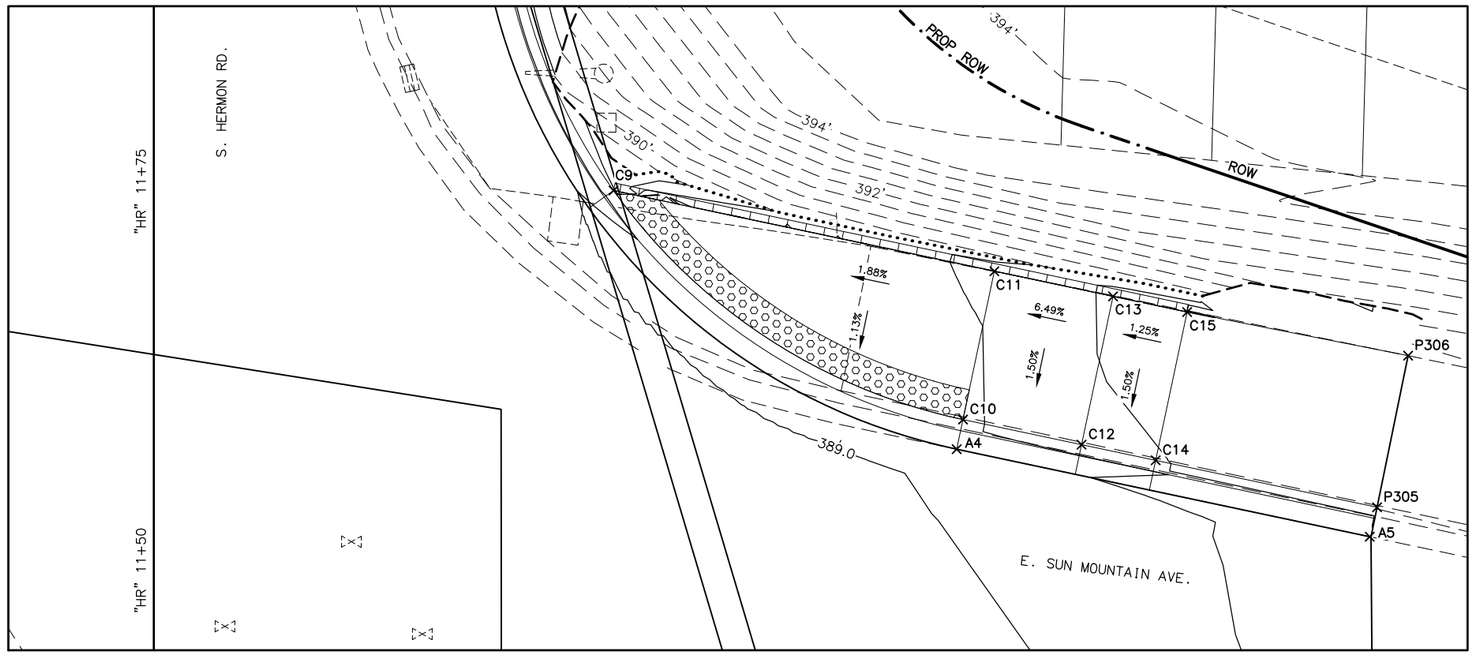

GRADING LAYOUT TABLE

POINT	ALIGN	STATION	OFFSET	ELEV.	DESC.
A1	"HR"	11+79.41	88.51' L	387.59 ±	EOP
A2	"HR"	11+77.59	72.53' L	387.81	PC
A3	"HR"	11+97.58	21.28' R	388.70	PC
A4	"HR"	11+58.00	52.99' R	389.39	PT
A5	"HR"	11+52.23	80.25' R	389.73 ±	EOP
C1	"HR"	11+81.10	56.54' L	388.47	RAMP TOP
C2	"HR"	11+85.87	58.04' L	388.55	RAMP TOP
C3	"HR"	11+83.78	50.16' L	388.15	RAMP BOTTOM
C4	"HR"	11+88.19	52.51' L	388.23	RAMP BOTTOM
C5	"HR"	11+86.85	45.30' L	388.23	RAMP BOTTOM
C6	"HR"	11+90.86	48.29' L	388.31	RAMP BOTTOM
C7	"HR"	11+92.21	39.49' L	388.77	RAMP TOP
C8	"HR"	11+95.51	43.24' L	388.84	RAMP TOP
C9	"HR"	11+75.07	30.34' R	389.04	LANDING
C10	"HR"	11+59.96	53.40' R	389.41	RAMP BOTTOM
C11	"HR"	11+69.74	55.47' R	389.56	RAMP BOTTOM
C12	"HR"	11+58.30	61.23' R	389.92	RAMP TOP
C13	"HR"	11+68.08	63.30' R	390.07	RAMP TOP
C14	"HR"	11+57.26	66.12' R	389.99	LANDING
C15	"HR"	11+67.05	68.19' R	390.14	LANDING
P300	"HR"	11+81.40	88.28' L	388.03 ±	PATHWAY
P301	"HR"	11+90.95	87.19' L	388.41 ±	PATHWAY
P302	"HR"	11+85.23	77.78' L	388.27	SW
P303	"HR"	11+79.58	72.30' L	388.25	TBC
P304	"HR"	11+84.54	71.74' L	388.32	SW
P305	"HR"	11+54.17	80.73' R	390.21 ±	PATHWAY
P306	"HR"	11+64.17	82.78' R	390.30 ±	PATHWAY

SHEET NO.	TOTAL SHEETS
G2	G9
STATE	YEAR
ALASKA	2027

PROJECT DESIGNATION

0001729/
CFHWY00799

NO.	REVISION
DATE	
NO.	REVISION
DATE	
NO.	REVISION
DATE	

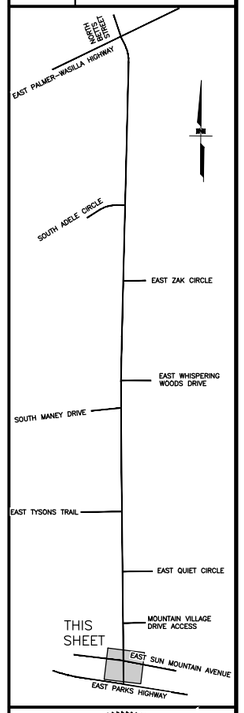

STATE OF ALASKA
PROFESSIONAL ENGINEER
PS&E REVIEW
AUGUST 2026

PLANS DEVELOPED BY:
LOUNSBURY & ASSOCIATES INC.
3230 C ST, SUITE 201,
ANCHORAGE, AK 99503
(907)272-5451
CERTIFICATE OF AUTHORITY NO. AECC391

STATE OF ALASKA
DEPARTMENT OF TRANSPORTATION
AND PUBLIC FACILITIES

HERMON ROAD
PARKS HIGHWAY TO
PALMER-WASILLA HIGHWAY

APPROACH
GRADING PLANS

DRAWING LOCATION
C:\DOWL_PW\D0415158\PL-00799_G-INTERSECTIONS.DWG

DATE 8/7/2026 TIME 11:13 AM
SCALE 1" = 5'
AH SA DJ

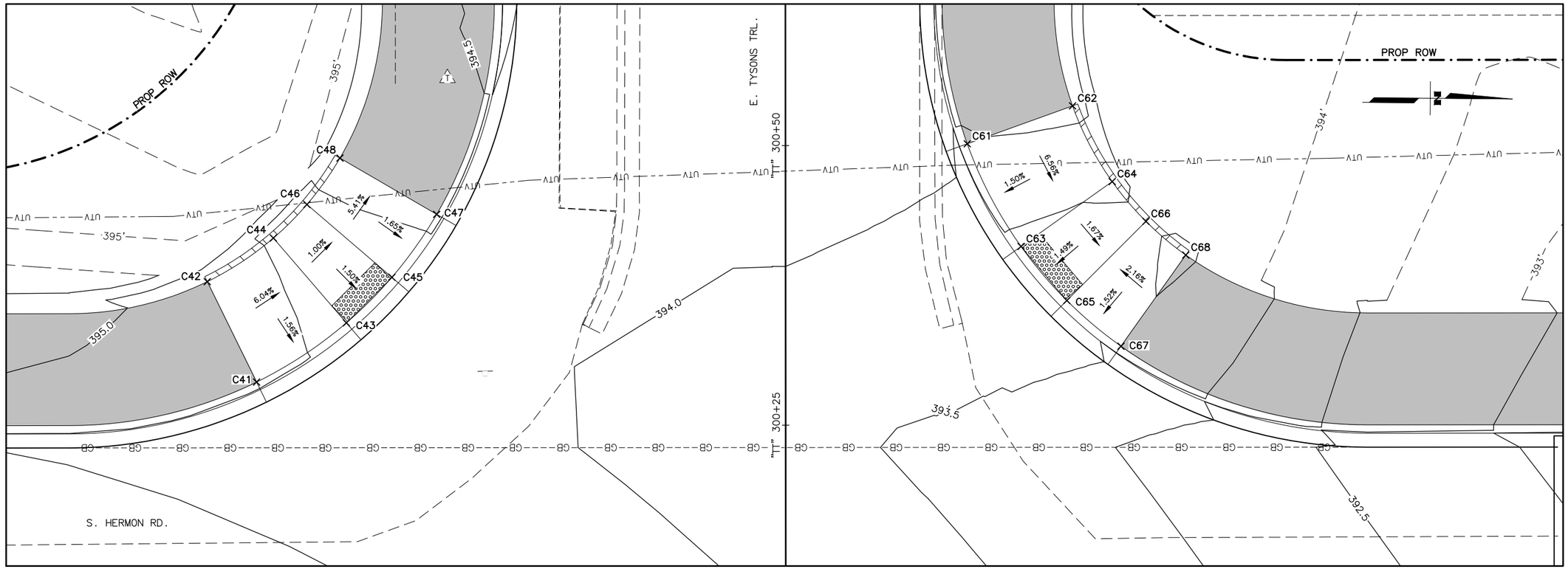

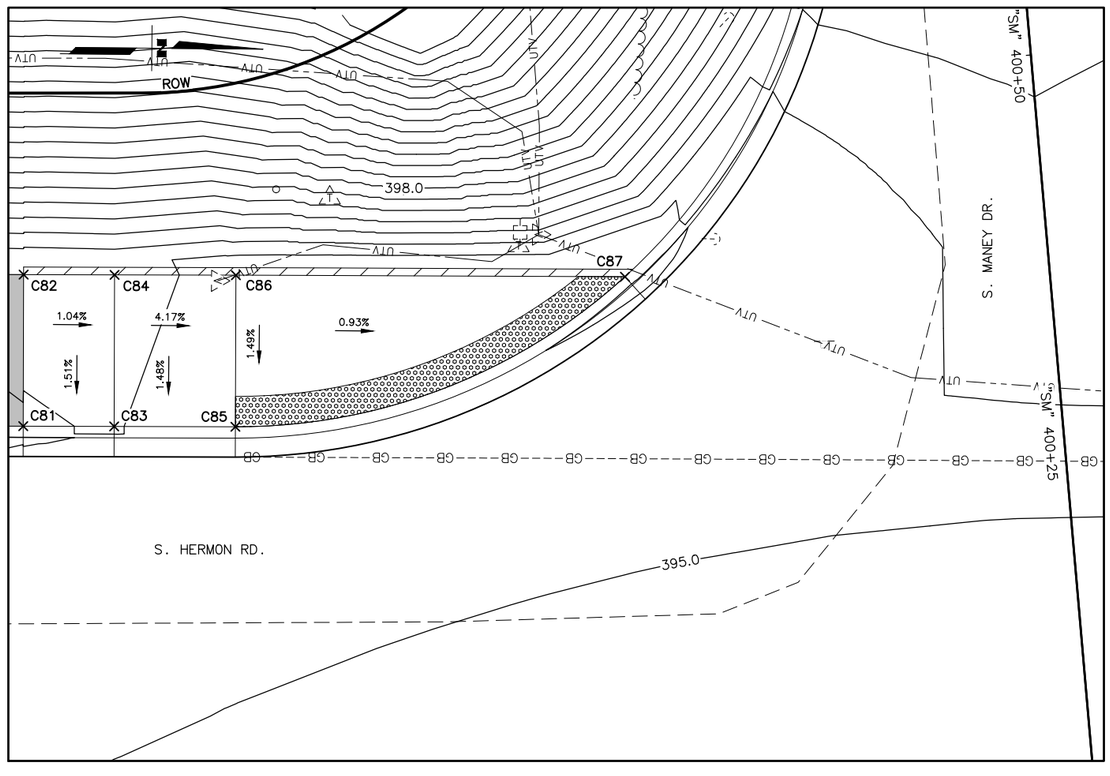

GRADING LAYOUT TABLE

POINT	ALIGN	STATION	OFFSET	ELEV.	DESC.
C41	"TT"	300+28.88	47.27' L	394.77	RAMP TOP
C42	"TT"	300+37.86	51.67' L	394.92	RAMP TOP
C43	"TT"	300+34.17	39.24' L	394.28	RAMP BOTTOM
C44	"TT"	300+41.76	45.76' L	394.43	RAMP BOTTOM
C45	"TT"	300+38.24	35.17' L	394.24	RAMP BOTTOM
C46	"TT"	300+44.76	42.76' L	394.39	RAMP BOTTOM
C47	"TT"	300+43.87	31.17' L	394.58	RAMP TOP
C48	"TT"	300+48.90	39.81' L	394.73	RAMP TOP
C61	"TT"	300+50.15	16.24' R	394.47	RAMP TOP
C62	"TT"	300+53.53	25.65' R	394.62	RAMP TOP
C63	"TT"	300+40.97	21.04' R	393.90	RAMP BOTTOM
C64	"TT"	300+46.76	29.19' R	394.05	RAMP BOTTOM
C65	"TT"	300+36.13	25.13' R	393.80	RAMP BOTTOM
C66	"TT"	300+43.20	32.20' R	393.95	RAMP BOTTOM
C67	"TT"	300+32.04	29.97' R	393.92	RAMP TOP

GRADING LAYOUT TABLE

POINT	ALIGN	STATION	OFFSET	ELEV.	DESC.
C68	"TT"	300+40.24	35.69' R	394.07	RAMP TOP
C81	"SM"	400+31.36	68.36' L	394.98	LANDING
C82	"SM"	400+41.32	67.47' L	395.13	LANDING
C83	"SM"	400+30.83	62.39' L	395.03	RAMP TOP
C84	"SM"	400+40.79	61.49' L	395.18	RAMP TOP
C85	"SM"	400+30.11	54.42' L	394.69	RAMP BOTTOM
C86	"SM"	400+40.07	53.52' L	394.84	RAMP BOTTOM
C87	"SM"	400+37.74	27.95' L	394.55	LANDING

SHEET NO.	TOTAL SHEETS
G3	G9
STATE	YEAR
ALASKA	2027

PROJECT DESIGNATION

0001729/
CFHWY00799

NO.	REVISION
DATE	
NO.	REVISION
DATE	
NO.	REVISION
DATE	

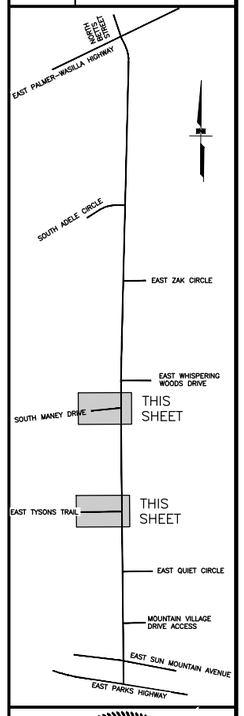

STATE OF AL
PS&E REVIEW
AUGUST 2026
PROFESSIONAL ENGINEER

PLANS DEVELOPED BY:
LOUNSBURY & ASSOCIATES INC.
3230 C ST, SUITE 201,
ANCHORAGE, AK 99503
(907)272-5451
CERTIFICATE OF AUTHORITY NO. AECC391

STATE OF ALASKA
DEPARTMENT OF TRANSPORTATION
AND PUBLIC FACILITIES

HERMON ROAD
PARKS HIGHWAY TO
PALMER-WASILLA HIGHWAY

APPROACH GRADING PLANS

DRAWING LOCATION
C:\DOWL_PW\D0415158\PL-00799_G-APPROACH.DWG

DATE 8/7/2026 TIME 11:14 AM
SCALE 1" = 5'
AH SA DU

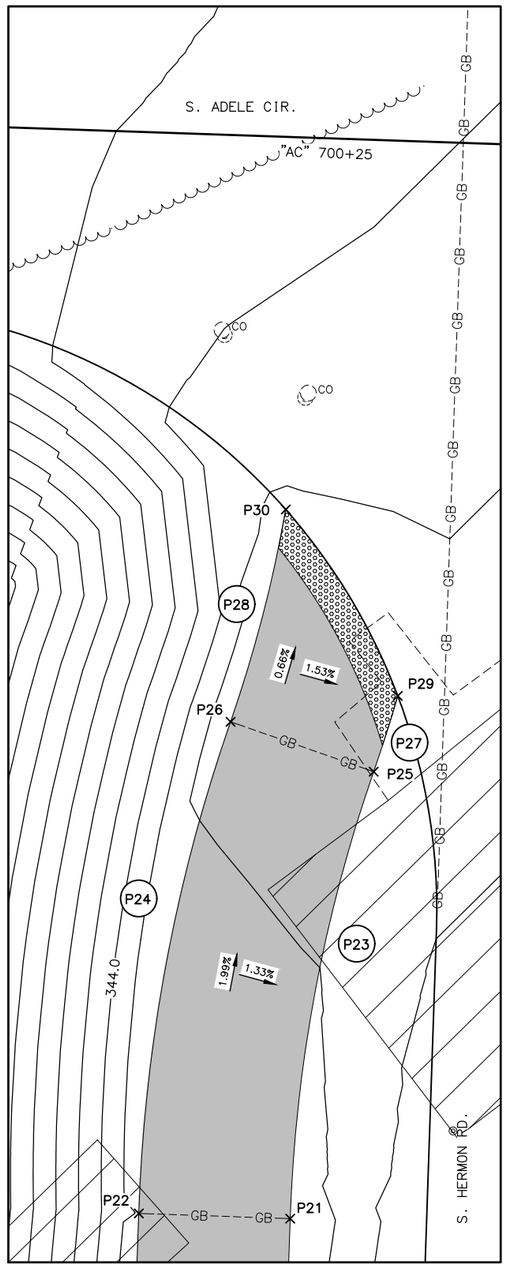

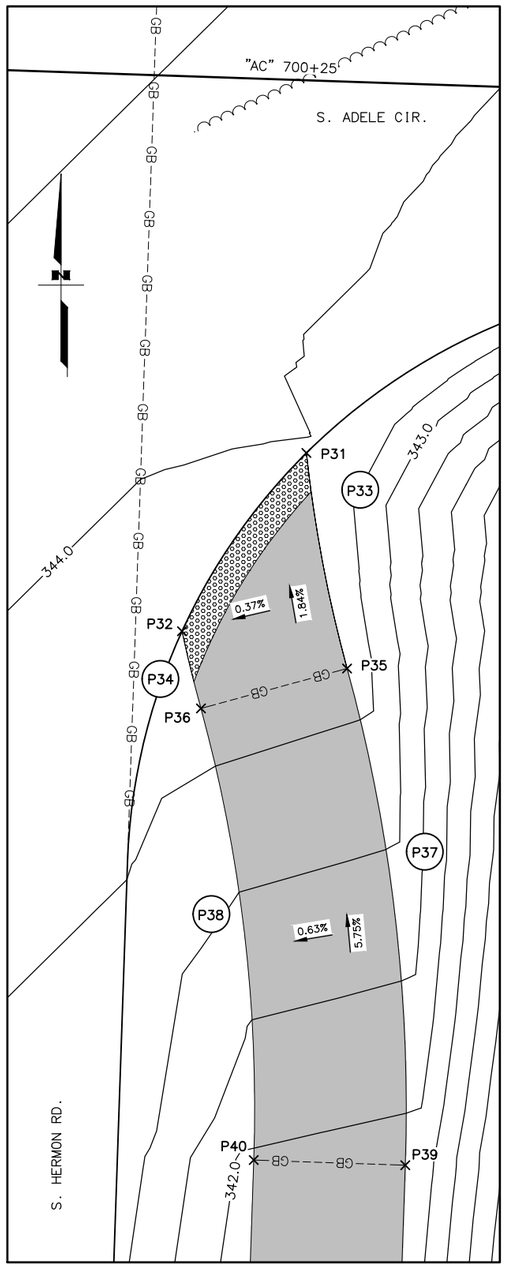

GRADING LAYOUT TABLE

POINT	ALIGN	STATION	OFFSET	ELEV.	DESC.
P1	"SM"	400+34.14	19.23' R	395.01	PATHWAY
P2	"SM"	401+04.03	15.28' R		RP, R=70'
P3	"SM"	400+34.97	26.72' R	394.89	PRC
P4	"SM"	400+00.00	59.30' R		RP, R=80'
P5	"SM"	400+35.68	47.45' R	393.78	PATHWAY
P6	"SM"	400+25.72	46.50' R	393.93	PATHWAY
P7	"SM"	400+00.00	59.30' R		RP, R=70'
P8	"SM"	400+25.17	28.79' R	394.92	PATHWAY
P21	"AC"	700+25.00	71.32' L	344.65	PATHWAY
P22	"AC"	700+35.00	71.32' L	344.50	PATHWAY
P23	"AC"	700+00.00	103.50' L		RP, R=100'
P24	"AC"	700+00.00	103.50' L		RP, R=110'
P25	"AC"	700+20.50	41.66' L	345.28	PRC
P26	"AC"	700+30.05	38.69' L	345.13	PRC
P27	"AC"	701+17.77	2.53' L		RP, R=100'
P28	"AC"	701+17.77	2.53' L		RP, R=90'

GRADING LAYOUT TABLE

POINT	ALIGN	STATION	OFFSET	ELEV.	DESC.
P29	"AC"	700+19.08	36.62' L	345.25	PATHWAY
P30	"AC"	700+26.88	24.57' L	345.04	PATHWAY
P31	"AC"	700+26.88	24.57' R	343.97	PATHWAY
P32	"AC"	700+19.08	36.62' R	343.76	PATHWAY
P33	"AC"	701+11.11	20.44' R		RP, R=90'
P34	"AC"	701+11.11	20.44' R		RP, R=100'
P35	"AC"	700+30.05	38.69' R	343.70	PRC
P36	"AC"	700+20.50	41.66' R	343.73	PRC
P37	"AC"	700+00.00	103.50' R		RP, R=110'
P38	"AC"	700+00.00	103.50' R		RP, R=100'
P39	"AC"	700+35.00	71.32' R	341.80	PATHWAY
P40	"AC"	700+25.00	71.32' R	341.95	PATHWAY

NOTES: ALL POINTS ARE TO THE EDGE OF PAVEMENT (EOP) UNLESS OTHERWISE NOTED.

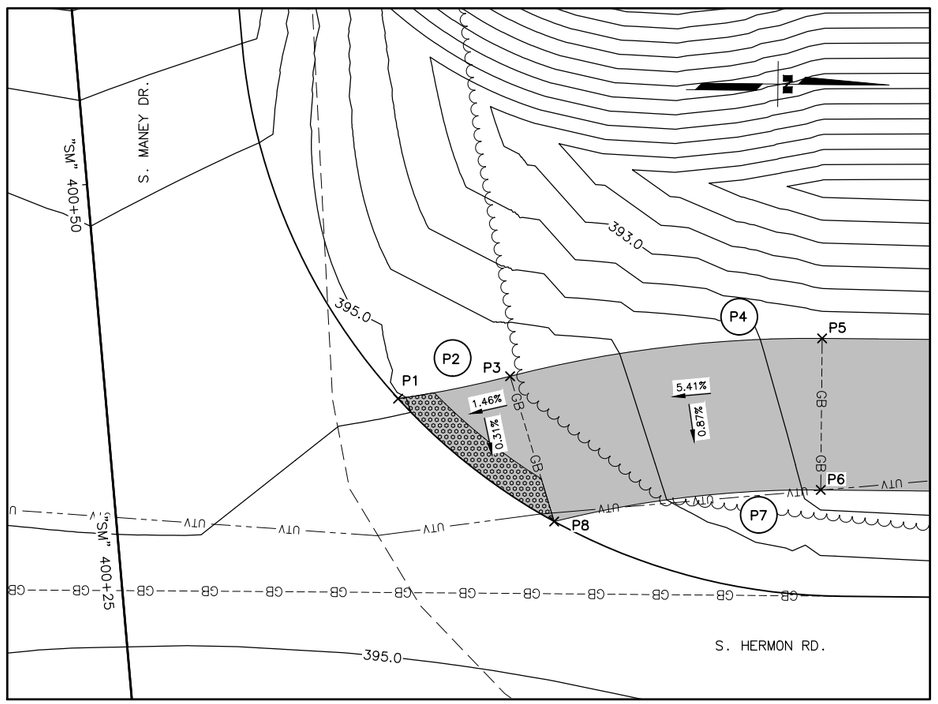

SHEET NO.	TOTAL SHEETS
G4	G9
STATE	YEAR
ALASKA	2027

PROJECT DESIGNATION

0001729/
CFHWY00799

NO.	REVISION
DATE	
NO.	REVISION
DATE	
NO.	REVISION
DATE	

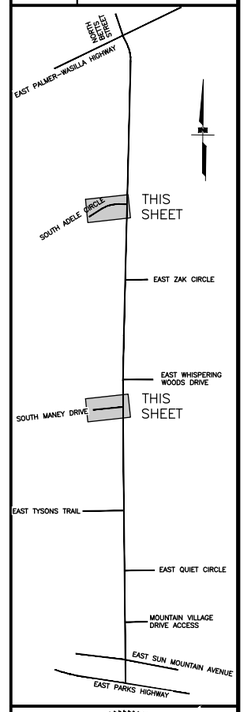

STATE OF ALASKA
PS&E REVIEW
AUGUST 2026
PROFESSIONAL ENGINEER

PLANS DEVELOPED BY:
LOUNSBURY & ASSOCIATES INC.
3230 C ST, SUITE 201,
ANCHORAGE, AK 99503
(907)272-5451
CERTIFICATE OF AUTHORITY NO. AECC391

STATE OF ALASKA
DEPARTMENT OF TRANSPORTATION
AND PUBLIC FACILITIES

HERMON ROAD
PARKS HIGHWAY TO
PALMER-WASILLA HIGHWAY

APPROACH
GRADING PLANS

DATE 8/7/2026 TIME 11:15 AM
SCALE 1" = 5'
AH SA DJ

DRAWING LOCATION
C:\DOWL_PW\0041518\PL-00799_G-APPROACH.DWG

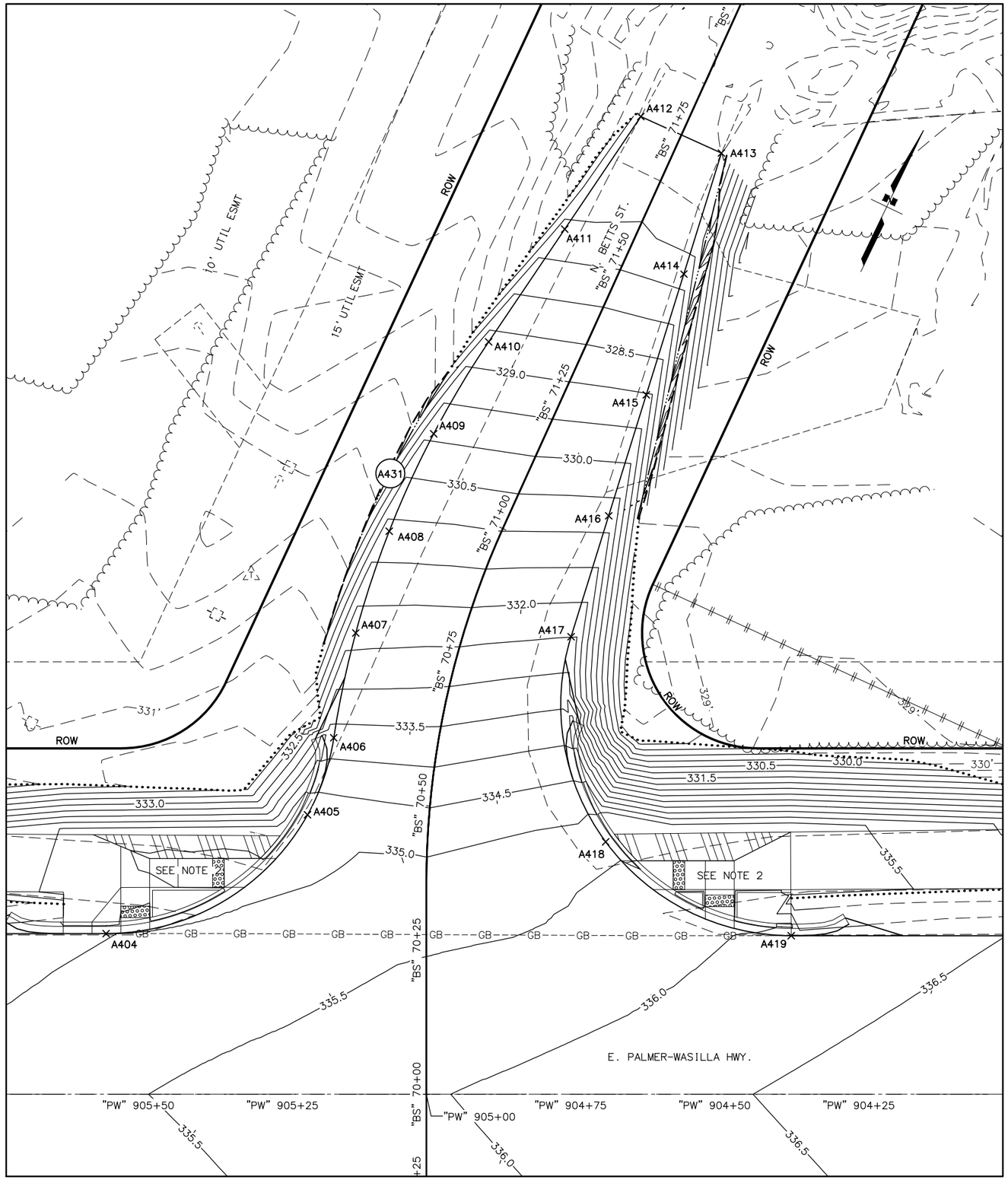

GRADING LAYOUT TABLE

POINT	ALIGN	STATION	OFFSET	ELEV.	DESC.
A404	"BS"	70+27.87	55.57' L	334.98	EOP
A405	"BS"	70+47.01	21.05' L	334.85	3/4
A406	"BS"	70+59.20	18.00' L	333.70	PRC
A407	"BS"	70+75.80	18.00' L	332.30	1/4
A408	"BS"	70+92.40	18.00' L	331.14	1/2
A409	"BS"	71+10.03	17.72' L	329.91	3/4
A410	"BS"	71+28.49	15.63' L	328.65	PT
A411	"BS"	71+51.75	11.68' L	327.11	1/2
A412	"BS"	71+75.00	7.73' L	326.58±	ME
A413	"BS"	71+75.00	7.62' R	327.00±	ME
A414	"BS"	71+53.21	10.35' R	327.29	1/4
A415	"BS"	71+31.41	13.08' R	329.02	1/2
A416	"BS"	71+09.62	15.81' R	330.76	3/4
A417	"BS"	70+86.10	17.94' R	332.49	PC
A418	"BS"	70+45.67	30.87' R	335.42	1/2
A419	"BS"	70+27.49	63.30' R	336.12	EOP
A431	"BS"	70+36.47	150.00' R		RP, R=168'

NOTES:

1. ALL POINTS ARE TO THE EDGE OF PAVEMENT UNLESS OTHERWISE NOTED.

2. SEE SHEET G7 FOR CURB RAMP GRADING.

SHEET NO.	TOTAL SHEETS
G5	G9
STATE	YEAR
ALASKA	2027

PROJECT DESIGNATION

0001729/
CFHWY00799

NO.	REVISION
DATE	
NO.	REVISION
DATE	
NO.	REVISION
DATE	

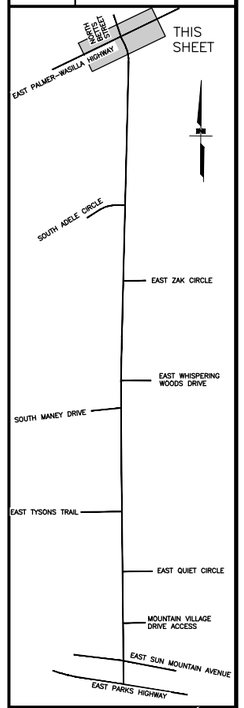

STATE OF ALASKA
PS&E REVIEW
AUGUST 2026
PROFESSIONAL ENGINEER

PLANS DEVELOPED BY:
LOUNSBURY & ASSOCIATES INC.
3230 C ST, SUITE 201,
ANCHORAGE, AK 99503
(907)272-5451
CERTIFICATE OF AUTHORITY NO. AECC391

STATE OF ALASKA
DEPARTMENT OF TRANSPORTATION
AND PUBLIC FACILITIES

HERMON ROAD
PARKS HIGHWAY TO
PALMER-WASILLA HIGHWAY

APPROACH GRADING PLANS

DRAWING LOCATION
C:\DOWL_PW\D0415158\PL-00799_G-INTERSECTIONS.DWG

DATE 8/7/2026 TIME 11:15 AM
SCALE 1" = 10'
AH SA DJ

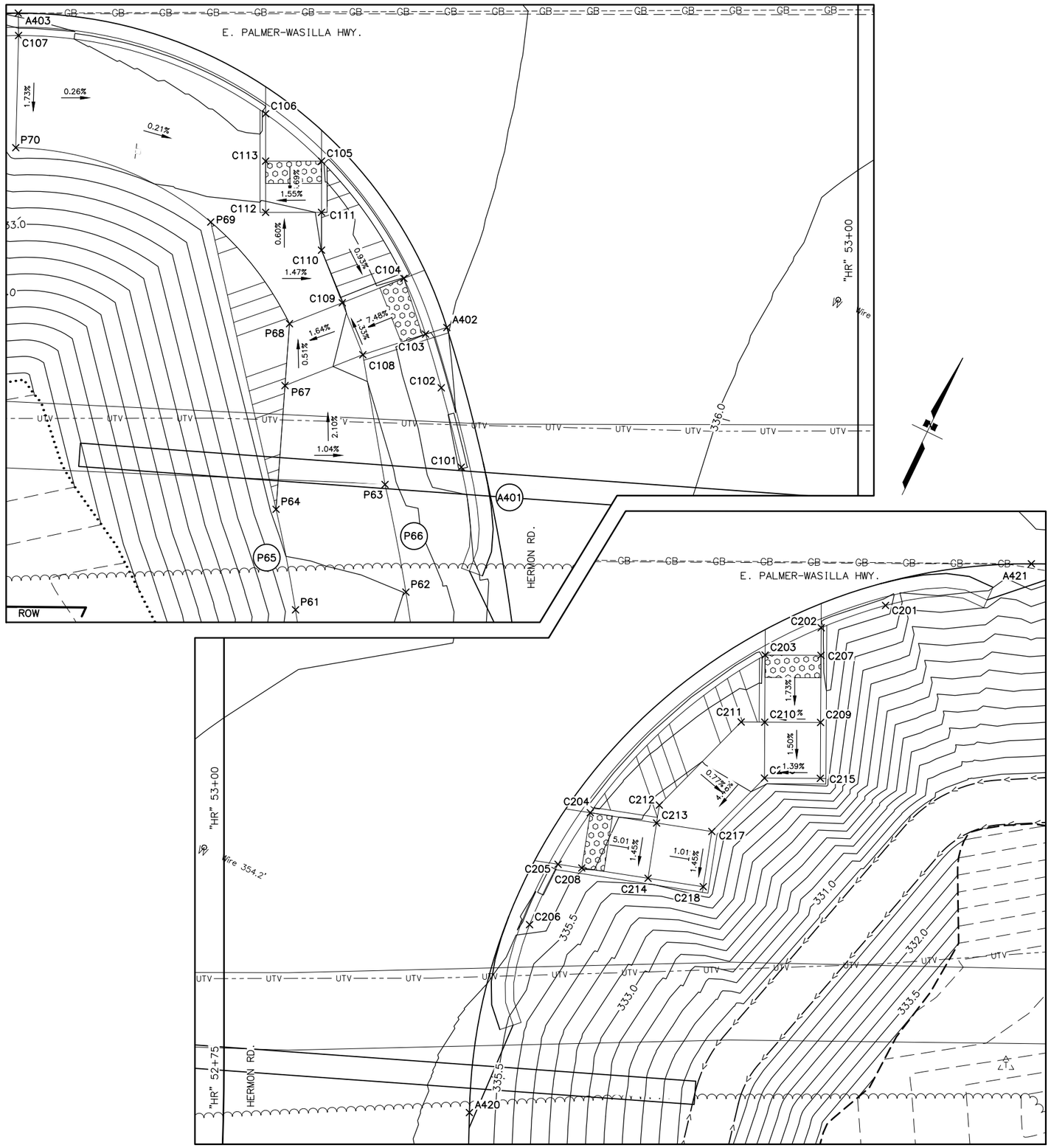

GRADING LAYOUT TABLE

POINT	ALIGN	STATION	OFFSET	ELEV.	DESC.
A401	"HR"	51+58.10	181.94' L		RP, R=160'
A402	"HR"	52+93.11	36.79' L	335.50	PC
A403	"HR"	53+21.22	75.14' L	335.02	PT
A420	"HR"	52+72.27	22.00' R	335.92	PRC
A421	"HR"	53+20.95	72.23' R	336.47	PT
C101	"HR"	52+80.62	35.50' L	336.05	CURB TERMINATION
C102	"HR"	52+87.72	37.29' L	335.98	TBC
C103	"HR"	52+92.52	38.70' L	335.50	RAMP BOTTOM
C104	"HR"	52+97.50	40.64' L	335.44	RAMP BOTTOM
C105	"HR"	53+07.99	48.01' L	335.32	RAMP BOTTOM
C106	"HR"	53+12.23	53.01' L	335.25	LANDING
C107	"HR"	53+19.22	75.12' L	335.45	CURB TERMINATION
C108	"HR"	52+90.67	44.31' L	335.05	RAMP TOP
C109	"HR"	52+95.32	46.14' L	334.99	RAMP TOP
C110	"HR"	53+00.03	48.01' L	335.00	SW
C111	"HR"	53+03.91	48.01' L	335.04	RAMP TOP
C112	"HR"	53+03.91	53.01' L	334.97	RAMP TOP
C113	"HR"	53+07.99	53.01' L	335.24	RAMP BOTTOM
C201	"HR"	53+17.23	59.18' R	336.80	CURB TERMINATION
C202	"HR"	53+15.24	53.42' R	336.33	LANDING
C203	"HR"	53+12.79	48.41' R	336.29	RAMP BOTTOM
C204	"HR"	52+98.69	32.77' R	336.13	RAMP BOTTOM
C205	"HR"	52+94.08	29.88' R	336.09	LANDING
C206	"HR"	52+88.68	27.34' R	336.48	CURB TERMINATION
C207	"HR"	53+12.76	53.41' R	336.31	RAMP BOTTOM
C208	"HR"	52+93.75	32.01' R	336.06	RAMP BOTTOM
C209	"HR"	53+06.76	53.38' R	336.22	RAMP TOP
C210	"HR"	53+06.79	48.38' R	336.17	RAMP TOP
C211	"HR"	53+06.80	46.26' R	336.12	SW
C212	"HR"	52+99.37	38.95' R	335.87	SW
C213	"HR"	52+97.77	38.70' R	335.83	RAMP TOP
C214	"HR"	52+92.83	37.94' R	335.76	RAMP TOP
C215	"HR"	53+01.76	53.35' R	336.15	LANDING
C216	"HR"	53+01.79	48.35' R	336.08	LANDING
C217	"HR"	52+97.01	43.64' R	335.78	LANDING
C218	"HR"	52+92.07	42.88' R	335.71	LANDING
P61	"HR"	52+65.60	50.13' L	334.36	PATHWAY
P62	"HR"	52+68.01	40.33' L	334.50	PATHWAY
P63	"HR"	52+79.06	42.32' L	334.82	PATHWAY
P64	"HR"	52+76.84	52.07' L	334.67	PATHWAY
P65	"HR"	51+58.10	181.94' L		RP, R=141'
P66	"HR"	51+58.10	181.94' L		RP, R=151'
P67	"HR"	52+87.92	51.27' L	334.93	LANDING
P68	"HR"	52+93.45	50.87' L	334.91	LANDING
P69	"HR"	53+02.54	57.92' L	334.84	PATHWAY
P70	"HR"	53+09.19	75.36' L	335.33	PATHWAY

NOTES: ALL POINTS ARE TO THE EDGE OF PAVEMENT UNLESS OTHERWISE NOTED.

SHEET NO.	TOTAL SHEETS
G6	G9
STATE	YEAR
ALASKA	2027

PROJECT DESIGNATION

0001729/
CFHWY00799

NO.	REVISION
DATE	
NO.	REVISION
DATE	
NO.	REVISION
DATE	

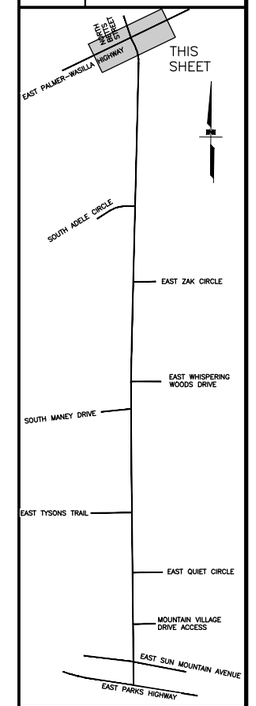

STATE OF ALASKA
PROFESSIONAL ENGINEER
PS&E REVIEW
AUGUST 2026

PLANS DEVELOPED BY:
LOUNSBURY & ASSOCIATES INC.
3230 C ST, SUITE 201,
ANCHORAGE, AK 99503
(907)272-5451
CERTIFICATE OF AUTHORITY NO. AECC391

STATE OF ALASKA
DEPARTMENT OF TRANSPORTATION
AND PUBLIC FACILITIES

HERMON ROAD
PARKS HIGHWAY TO
PALMER-WASILLA HIGHWAY

APPROACH GRADING PLANS

DRAWING LOCATION
C:\DOWL_PW\00415158\PL-00799_G-INTERSECTIONS.DWG

DATE 8/7/2026 TIME 11:15 AM
SCALE 1" = 5'
AH SA DJ

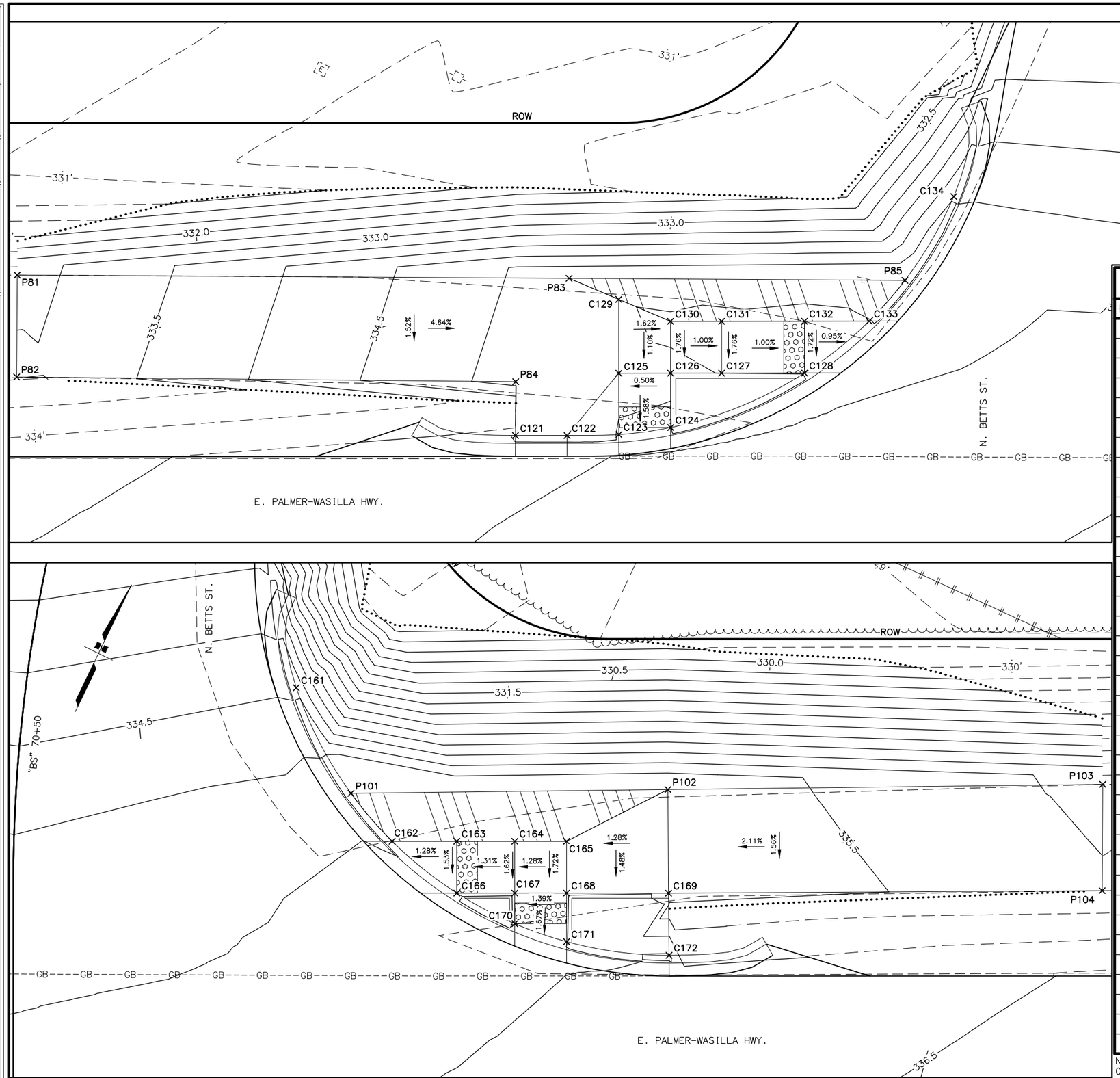

GRADING LAYOUT TABLE

POINT	ALIGN	STATION	OFFSET	ELEV.	DESC.
C121	"BS"	70+29.86	62.99' L	335.34	CURB TERMINATION
C122	"BS"	70+29.87	58.01' L	335.39	TBC
C123	"BS"	70+29.96	53.01' L	334.97	RAMP BOTTOM
C124	"BS"	70+30.64	48.01' L	334.96	RAMP BOTTOM
C125	"BS"	70+35.87	53.01' L	335.07	RAMP TOP
C126	"BS"	70+35.88	48.01' L	335.04	RAMP TOP
C127	"BS"	70+35.88	43.09' L	334.99	RAMP TOP
C128	"BS"	70+35.89	35.09' L	334.91	RAMP BOTTOM
C129	"BS"	70+41.29	53.13' L	335.02	LANDING
C130	"BS"	70+39.81	48.07' L	334.96	LANDING
C131	"BS"	70+39.90	43.14' L	334.91	RAMP TOP
C132	"BS"	70+40.05	35.15' L	334.83	RAMP BOTTOM
C133	"BS"	70+40.18	28.90' L	334.89	LANDING
C134	"BS"	70+50.88	21.47' L	334.96	CURB TERMINATION
C161	"BS"	70+59.31	25.87' R	334.91	CURB TERMINATION
C162	"BS"	70+41.79	36.49' R	335.54	LANDING
C163	"BS"	70+42.10	42.73' R	335.62	RAMP BOTTOM
C164	"BS"	70+42.41	48.31' R	335.69	RAMP TOP
C165	"BS"	70+42.71	53.31' R	335.75	LANDING
C166	"BS"	70+35.49	42.81' R	335.69	LANDING
C167	"BS"	70+35.49	48.39' R	335.77	RAMP TOP
C168	"BS"	70+35.49	53.39' R	335.84	RAMP TOP
C169	"BS"	70+35.48	63.24' R	335.95	PATHWAY
C170	"BS"	70+32.54	48.39' R	335.82	RAMP BOTTOM
C171	"BS"	70+30.81	53.39' R	335.92	TBC
C172	"BS"	70+29.49	63.28' R	336.55	CURB TERMINATION
P65	"HR"	51+58.10	181.94' L		RP, R=141'
P66	"HR"	51+58.10	181.94' L		RP, R=151'
P81	"BS"	70+41.57	111.22' L	332.81 ±	PATHWAY
P82	"BS"	70+35.51	111.13' L	332.96 ±	PATHWAY
P83	"BS"	70+42.64	57.99' L	335.08	PATHWAY
P84	"BS"	70+35.06	62.96' L	335.20	PATHWAY
P85	"BS"	70+43.62	25.59' L	335.31	TBC
P101	"BS"	70+47.50	32.27' R	335.85	TBC
P102	"BS"	70+51.98	62.71' R	335.81	PATHWAY
P103	"BS"	70+57.44	83.51' R	334.86 ±	PATHWAY
P104	"BS"	70+35.60	84.16' R	335.06 ±	PATHWAY

NOTES: ALL POINTS ARE TO THE EDGE OF PAVEMENT UNLESS OTHERWISE NOTED.

SHEET NO.	TOTAL SHEETS
G7	G9
STATE	YEAR
ALASKA	2027

PROJECT DESIGNATION

0001729/
CFHWY00799

NO.	REVISION
DATE	
NO.	REVISION
DATE	
NO.	REVISION
DATE	

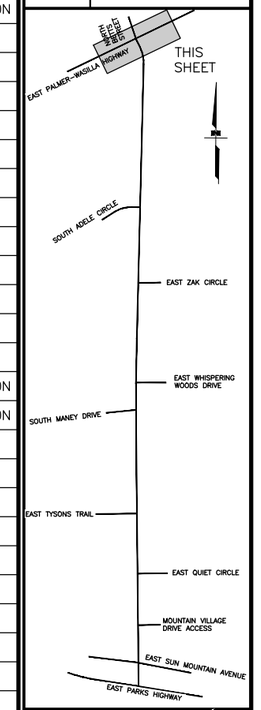

STATE OF ALASKA
PROFESSIONAL ENGINEER
PS&E REVIEW
AUGUST 2026

PLANS DEVELOPED BY:
LOUNSBURY & ASSOCIATES INC.
3230 C ST, SUITE 201,
ANCHORAGE, AK 99503
(907)272-5451
CERTIFICATE OF AUTHORITY NO. AECC391

STATE OF ALASKA
DEPARTMENT OF TRANSPORTATION
AND PUBLIC FACILITIES

HERMON ROAD
PARKS HIGHWAY TO
PALMER-WASILLA HIGHWAY

APPROACH GRADING PLANS

DRAWING LOCATION
C:\DOWL_PW\00415158\PL-00799_G-INTERSECTIONS.DWG

DATE 8/7/2026 TIME 11:15 AM
SCALE 1" = 5'
AH SA DJ

DESIGNED BY JHK
CHECKED BY ST
DRAFTED BY JHK

SCALE 1" = 20'

DATE 8/7/2026 TIME 11:15 AM

DRAWING LOCATION
C:_DOWL_PW\0043398\00799_G8_G9.DWG

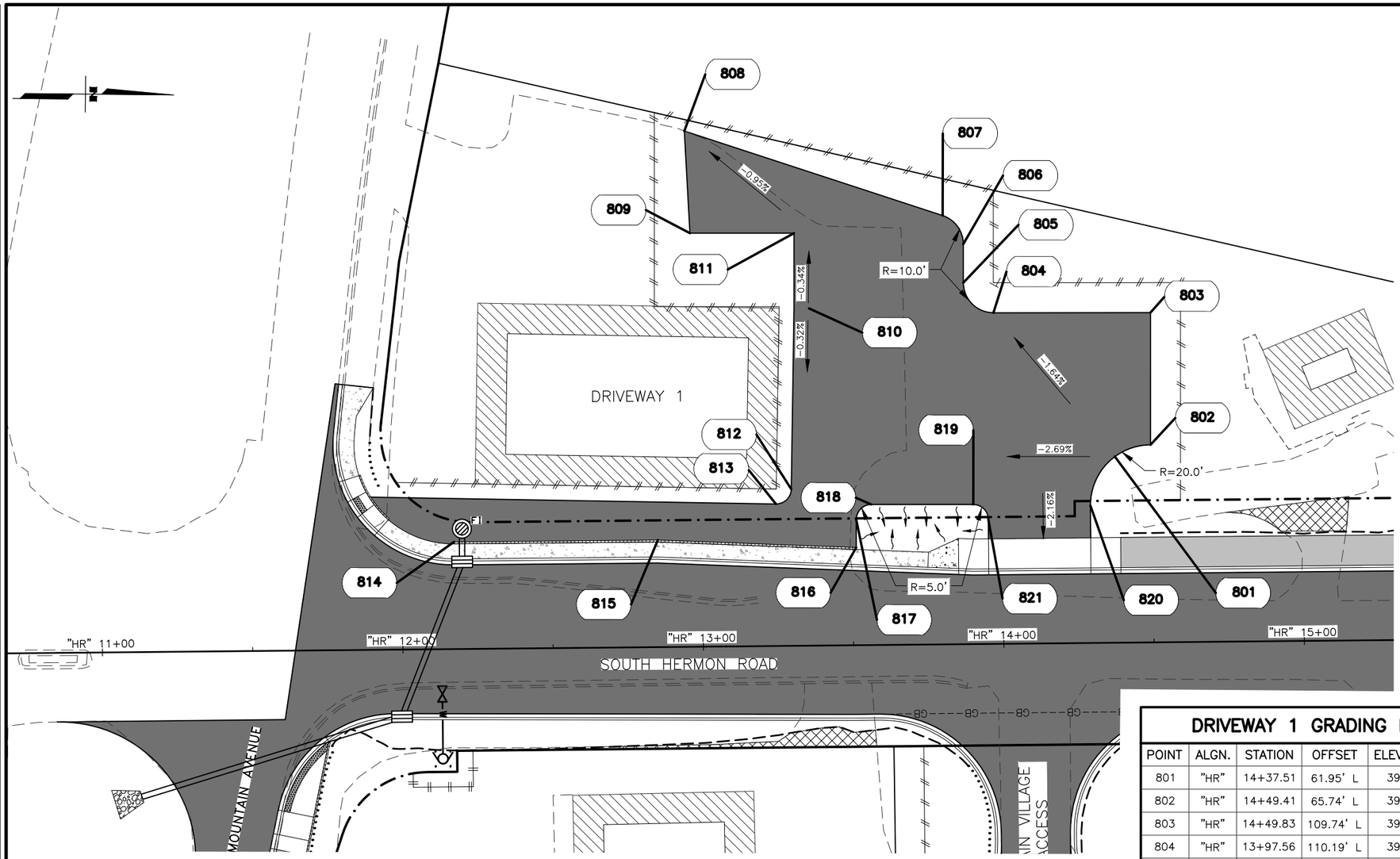

DRIVEWAY 1 GRADING POINTS

POINT	ALGN.	STATION	OFFSET	ELEVATION	REMARKS
801	"HR"	14+37.51	61.95' L	394.48	
802	"HR"	14+49.41	65.74' L	394.00	
803	"HR"	14+49.83	109.74' L	393.42	
804	"HR"	13+97.56	110.19' L	393.45	
805	"HR"	13+87.65	120.28' L	393.24	
806	"HR"	13+87.77	133.16' L	393.29	
807	"HR"	13+80.97	142.73' L	391.58	
808	"HR"	12+95.29	171.65' L	389.42	
809	"HR"	12+96.85	137.64' L	389.67	
810	"HR"	13+36.24	112.23' L	390.00	
811	"HR"	13+31.48	137.31' L	390.19	
812	"HR"	13+29.73	52.13' L	390.09	
813	"HR"	13+24.60	47.26' L	389.93	
814	"HR"	12+17.33	35.67' L	388.86	
815	"HR"	12+85.18	35.66' L	389.20	
816	"HR"	13+51.19	32.55' L	392.22	
817	"HR"	13+51.26	41.87' L	391.42	
818	"HR"	13+56.30	46.82' L	391.86	
819	"HR"	13+90.27	46.50' L	393.03	
820	"HR"	14+29.22	45.74' L	393.81	
821	"HR"	13+95.22	41.50' L	393.10	

SHEET NO.	TOTAL SHEETS
G8	G9
STATE	YEAR
ALASKA	2027

PROJECT DESIGNATION
0001729/
CFHWY00799

NO.	REVISION
DATE	
NO.	REVISION
DATE	
NO.	REVISION
DATE	

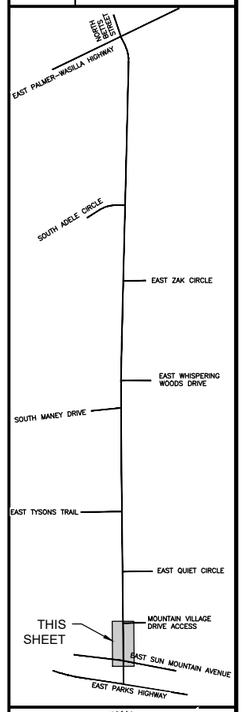

STATE OF ALASKA
PS&E REVIEW
AUGUST 2026
PROFESSIONAL ENGINEER

DOWL, LLC
5015 BUSINESS PARK BLVD
SUITE 4000
ANCHORAGE, AK 99503
(907) 562-2000
#AECL848 – AK

STATE OF ALASKA
DEPARTMENT OF TRANSPORTATION
AND PUBLIC FACILITIES

HERMON ROAD
PARKS HIGHWAY TO
PALMER–WASILLA HIGHWAY

DRIVEWAY 1
GRADING PLAN

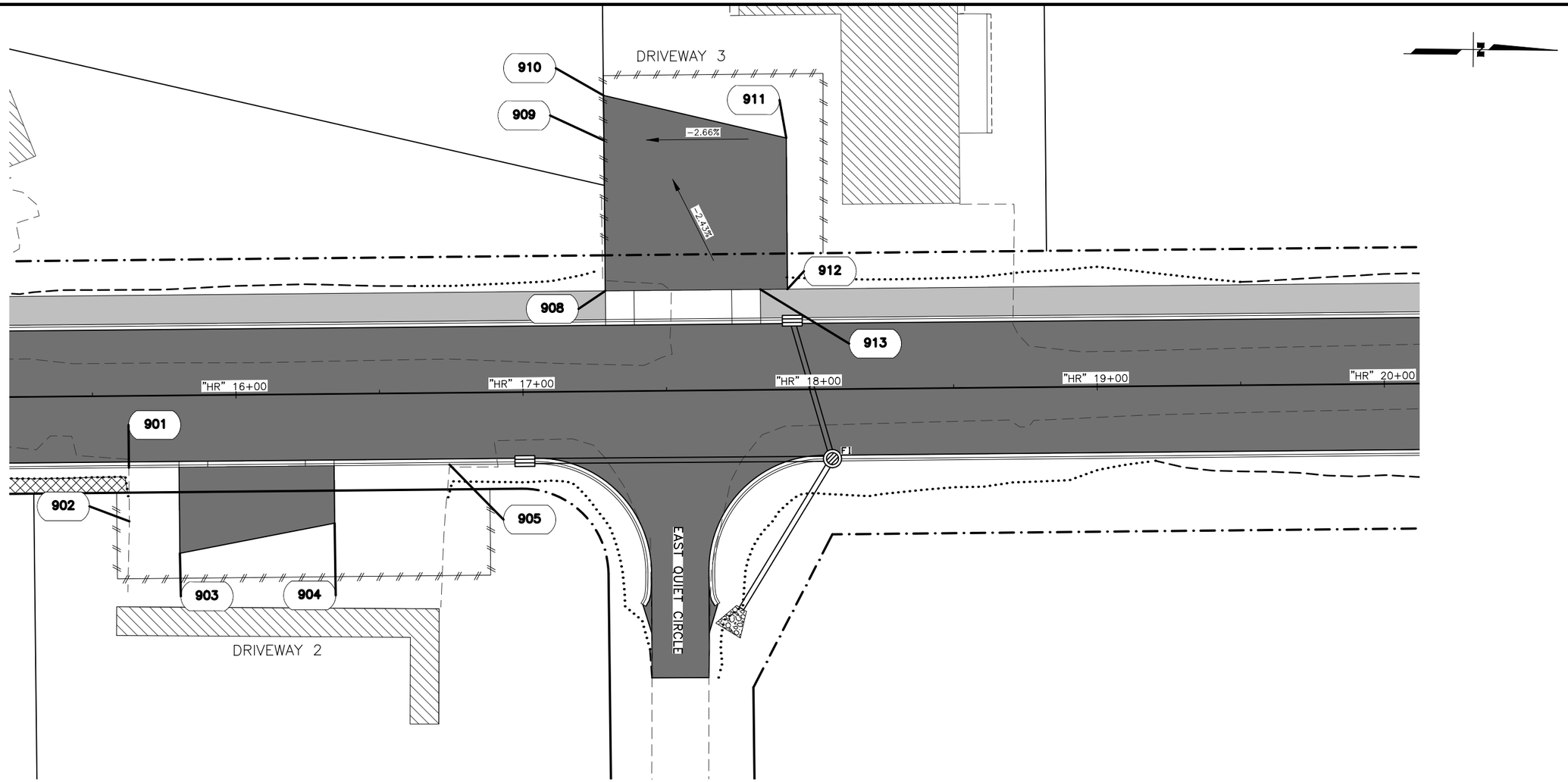

SHEET NO.	TOTAL SHEETS
G9	G9
STATE	YEAR
ALASKA	2027

PROJECT DESIGNATION

0001729/
CFHWY00799

NO.	REVISION
DATE	

NO.	REVISION
DATE	

NO.	REVISION
DATE	

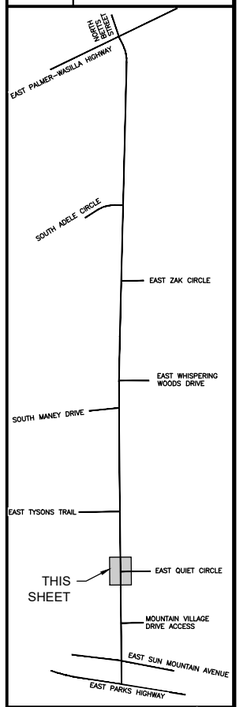

STATE OF AK
PROFESSIONAL ENGINEER
PS&E REVIEW
AUGUST 2026

DOWL, LLC
5015 BUSINESS PARK BLVD
SUITE 4000
ANCHORAGE, AK 99503
(907) 562-2000
#AECL848 – AK

STATE OF ALASKA
DEPARTMENT OF TRANSPORTATION
AND PUBLIC FACILITIES

HERMON ROAD
PARKS HIGHWAY TO
PALMER–WASILLA HIGHWAY

**DRIVEWAY 2 AND 3
GRADING PLAN**

DRIVEWAY 2 GRADING POINTS

POINT	ALGN.	STATION	OFFSET	ELEVATION	REMARKS
901	"HR"	15+62.45	25.00' R	393.75	
902	"HR"	15+62.45	43.67' R	393.55	
903	"HR"	15+79.95	55.00' R	393.88	
904	"HR"	16+33.95	45.00' R	393.07	
905	"HR"	16+74.14	25.00' R	392.26	

DRIVEWAY 3 GRADING POINTS

POINT	ALGN.	STATION	OFFSET	ELEVATION	REMARKS
908	"HR"	17+28.99	35.00' L	391.75	
909	"HR"	17+28.98	87.41' L	389.40	
910	"HR"	17+28.98	103.09' L	389.76	
911	"HR"	17+92.52	87.66' L	390.99	
912	"HR"	17+92.40	35.00' L	391.49	
913	"HR"	17+82.99	35.00' L	391.49	

DESIGNED BY JHK
CHECKED BY ST
DRAFTED BY JHK

SCALE 1" = 20'

DATE 8/7/2026 TIME 11:15 AM

DRAWING LOCATION
C:\DOWL_PW\0043398\00799_G8_G9.DWG

NO.	DATE	REVISION

STATE	PROJECT DESIGNATION	YEAR	SHEET NO.	TOTAL SHEETS
ALASKA	0001729/CFHWY00799	2027	H1	H18

DESIGNED BY SRT
CHECKED BY KLK
DRAFTED BY JHK

SCALE 1"=100'

DATE 8/7/2026 TIME 11:15 AM

DRAWING LOCATION
C:\DOWL_PW\0043398\00799_H1.DWG

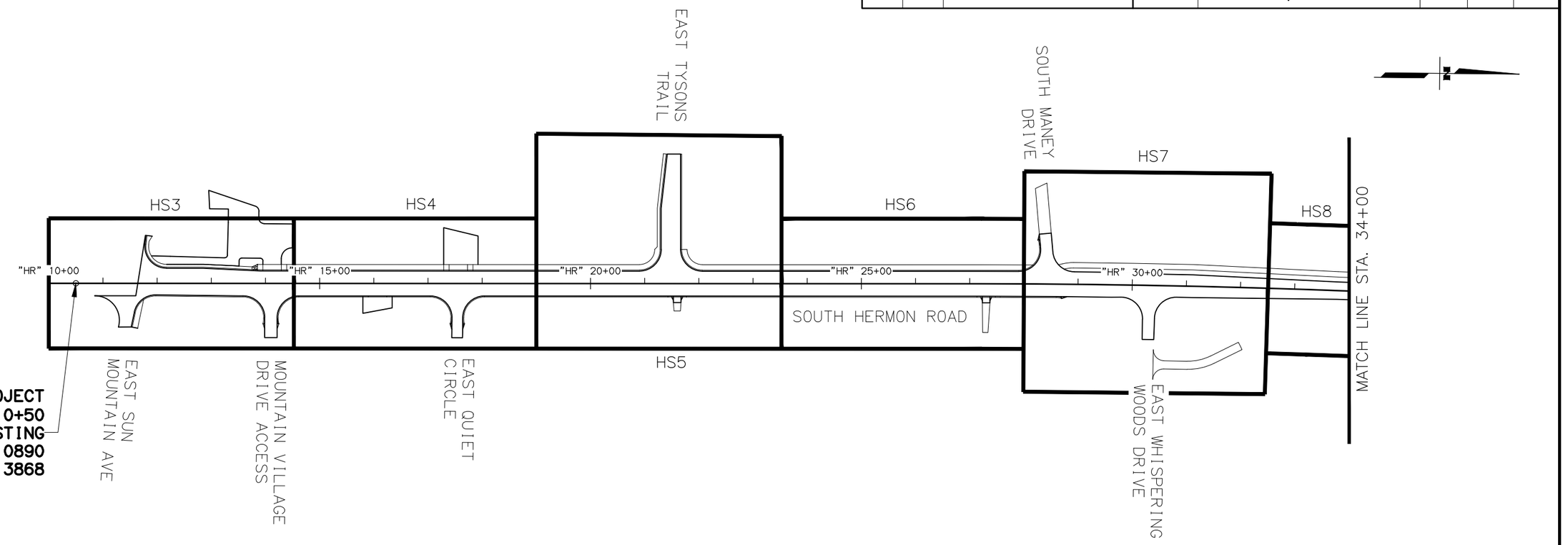

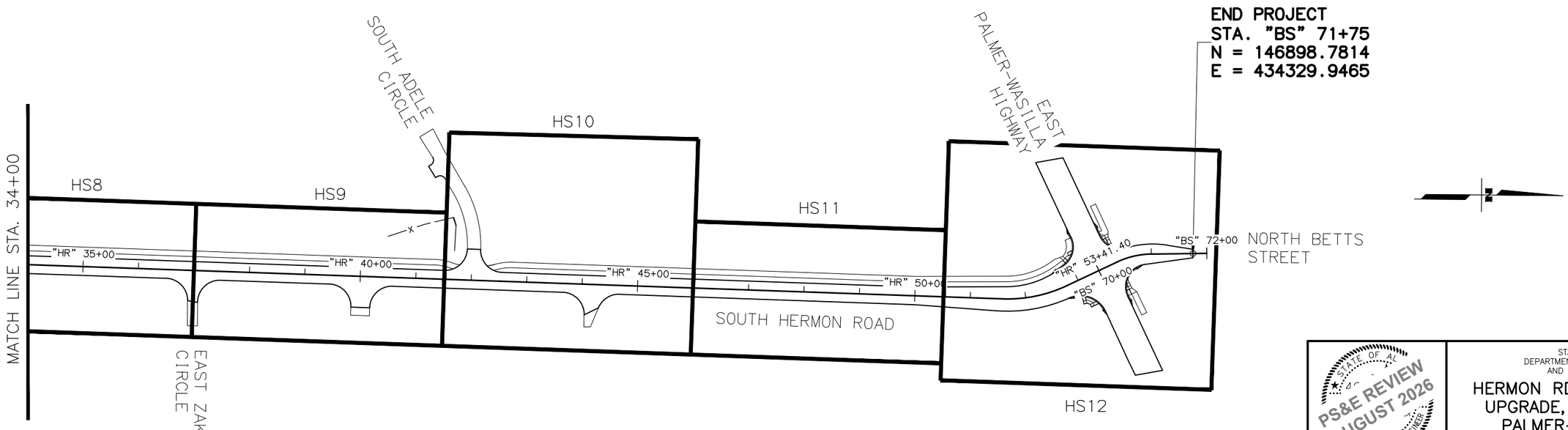

PS&E REVIEW AUGUST 2026

DOWL, LLC
5015 BUSINESS PARK BLVD
SUITE 4000
ANCHORAGE, AK 99503
(907) 562-2000
#AECL848 - AK

STATE OF ALASKA
DEPARTMENT OF TRANSPORTATION
AND PUBLIC FACILITIES

HERMON RD EXTENSION AND UPGRADE, PARKS HWY TO PALMER-WASILLA HWY

HS SHEET LAYOUT

NO.	DATE	REVISION	STATE	PROJECT DESIGNATION	YEAR	SHEET NO.	TOTAL SHEETS
			ALASKA	0001729/CFHWY00799	2027	H2	H18

DESIGNED BY SRT
CHECKED BY KLK
DRAFTED BY JHK
SCALE
DATE TIME 8/7/2026 11:16 AM
DRAWING LOCATION C:\DOWL_PW\0043398\00799_H_DTLS.DWG

SIGNING & STRIPING NOTES:

1. ALL STATION LOCATIONS FOR SIGN INSTALLATION ARE APPROXIMATE. INSTALL SIGNS AT LOCATIONS AS DIRECTED BY THE ENGINEER.
2. USE THE FOLLOWING DEFINITIONS TO DECIPHER THE ABBREVIATED SIGN POST TYPES IN THE SIGN SUMMARY SHEETS.
   A. PT MEANS A PERFORATED STEEL TUBE.
   B. T MEANS A SQUARE STEEL TUBE.
   C. P MEANS A ROUND STEEL PIPE.
   D. W MEANS A WIDE FLANGE BEAM.
   E. POPL MEANS A POLE PLATE INSTALLED PER ITS ALASKA STANDARD PLAN S-23.
3. FABRICATE ALL SIGNS FROM 0.125" THICK ALUMINUM SHEETING, UNLESS STATED ELSEWHERE.
4. FOR SIGNS SUPPORTED BY MULTIPLE POSTS, FABRICATE THE POSTS WITH THEIR TOPS LEVEL WITH ONE ANOTHER.
5. FOR PERFORATED STEEL TUBE SIGNPOSTS, INSTALL THE CONCRETE FOUNDATION OPTION SHOWN ON ALASKA STANDARD PLAN S-30. TRIM EACH PT POST TO LIMIT THE LENGTH INSERTED INTO THE FOUNDATION TO 12 INCHES.
6. FABRICATE GUIDE SIGNS ACCORDING TO THE SHOP DRAWINGS INCLUDED IN THE APPENDICES OF PART 4, CONTRACT PROVISIONS AND SPECIAL PROVISIONS. TRIM THE CORNERS OF ALL SIGNS TO THE RADIUS SHOWN ON EACH SHOP DRAWING.
7. ERECT NEW SIGNS BEFORE REMOVAL OF EXISTING SIGNS WITH SIMILAR MESSAGE. NOTIFY THE ENGINEER A MINIMUM OF 14 DAYS PRIOR TO BEGINNING SIGN REMOVAL AND SALVAGE OR DISPOSAL ACTIVITIES.
8. FOR SIGNS SUPPORTED BY MULTIPLE TUBES OR PIPES, LOCATE THE OUTER POSTS ON MAXIMUM SIX FEET CENTERS. INSTALL ADJACENT WIDE FLANGE POSTS ON MINIMUM EIGHT FEET CENTERS.
9. SELECTIVE AND HAND CLEARING SHALL BE PERFORMED AT THE DISCRETION OF THE ENGINEER, IN ACCORDANCE WITH SECTION 201, UPSTREAM OF ALL SIGN INSTALLATION LOCATIONS TO ACHIEVE MINIMUM SIGN VISIBILITY REQUIREMENTS. IF NOT INCLUDED AS A SEPARATE ITEM, THIS WORK SHALL BE SUBSIDIARY TO THE SIGN INSTALLATION ITEMS AND WORK.
10. FOR ALL FINAL PAVEMENT MARKINGS USE METHYLMETHACRYLATE MATERIALS. LONGITUDINAL, TRANSVERSE, GORE AND SYMBOL MARKINGS SHALL BE INLAID AT 125 MILS.
11. DIMENSIONS REFER TO THE CENTER OF STRIPE AND THE EDGE OF PAVEMENT OR FACE OF CURB WHEN PRESENT.
12. IF THE NEW AND EXISTING PAVEMENT MARKINGS ARE NOT ALIGNED AT MATCH LINE, TRANSITION BETWEEN THE TWO USING A 100:1 TAPER ON THE NEW PAVEMENT.
13. WHERE NEW STRIPING IS TO EXTEND BEYOND PAVING LIMITS, REMOVE EXISTING STRIPING IN ACCORDANCE WITH SUBSECTION 670-3.04 TO THE EXTENT OF STRIPING LIMITS.

ABBREVIATIONS

AWG	AMERICAN WIRE GAUGE	NB	NORTH BOUND
CAM	CAMERA	OMNI	OMNI DIRECTIONAL ANTENNA
EB	EAST BOUND	P#	TRAFFIC SIGNAL POLE #
GND	GROUND	PE	PHOTOELECTRIC CELL
HDPE	HIGH DENSITY POLYETHYLENE CONDUIT	PED B ##	PEDESTRIAN PUSH BUTTON #
HEAD	VEHICULAR SIGNAL HEAD	PEDI	PEDESTRIAN SIGNAL HEAD
SIG	SIGNAL	PRE #	PREEMPTION #
I/C	INTERCONNECT	PRE CON #	PREEMPTION CONFIRMATION LIGHT #
INTX	INTERSECTION	RAD	RADAR
INTXL	INTERSECTION LIGHTING	RMC	RIGID METAL CONDUIT
LC	LOAD CENTER	SB	SOUTH BOUND
LFNC	LIQUIDTIGHT FLEXIBLE NONMETALLIC CONDUIT	TC	TRAFFIC CONTROLLER
LTG	LIGHTING	WB	WEST BOUND
MUTCD	MANUAL ON UNIFORM TRAFFIC CONTROL DEVICES	YAGI	DIRECTIONAL ANTENNA

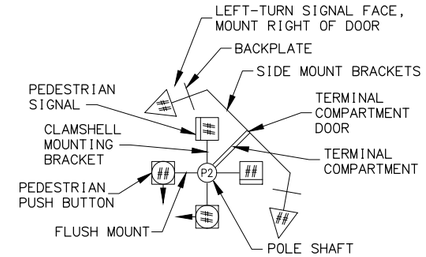

POLE SHAFT LEGEND

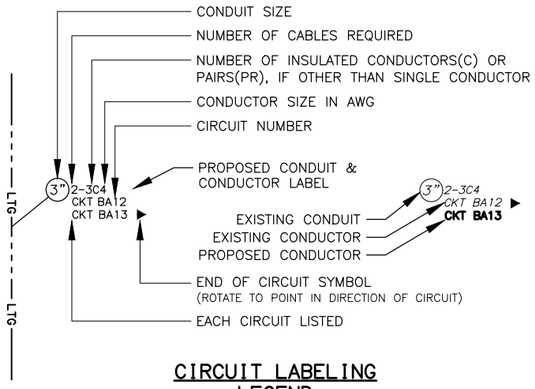

CIRCUIT LABELING LEGEND

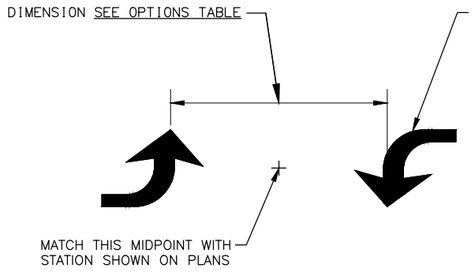

TWO WAY LEFT TURN ARROW DETAIL

OPTIONS	
POSTED SPEED	DIMENSION
35 MPH AND LESS	8 FEET
40 MPH-45 MPH	12 FEET
50 MPH AND GREATER	16 FEET

CALL BEFORE YOU DIG!

CONTRACTOR SHALL CALL A MINIMUM OF 3 DAYS IN ADVANCE OF CONSTRUCTION

ALASKA DIGLINE....907-278-3121 OR 800-478-3121

CALL OR GO TO WWW.AKONECALL.COM/STATEWIDE.HTM FOR MEMBER LIST OF WHO WILL BE NOTIFIED

FOUNDATIONS NOTES:

1. STATION & C.L. REFERENCE ARE TO THE CENTER OF THE STRUCTURE, EXCEPT ON LOOPS WHICH ARE TO THE CENTER OF THE TRAILING EDGE OF THE LOOP (EDGE NEAREST INTERSECTION).
2. LOCATE J-BOXES SO THAT THEY ARE LOCATED OUT OF THE PATHWAY, SIDEWALK, CURB RAMPS, AND DRAINAGE COLLECTION AREAS.
3. INSTALL LOAD CENTER AND TRAFFIC CONTROLLER FOUNDATIONS WITHIN 1-DEGREE OF PLUMB.
4. INSTALL ANCHOR BOLTS IN CAST FOUNDATIONS TO BE WITHIN 1:48 OF PLUMB.

SIGNAL SYSTEM NOTES:

1. FURNISH THE SIGNAL AND LUMINAIRE MASTARM LENGTHS AND DIMENSIONS SPECIFIED ON THE POLE ELEVATIONS.
2. INSTALL DEVICES SUCH THAT THE DIMENSIONS SHOWN TO THE BOTTOM OF THE DEVICES ON THE POLE ELEVATIONS ARE MINIMUMS. VERTICAL DIMENSIONS TO SIGNAL HEADS ARE TO BOTTOM OF THE BACK PLATE.
3. INSTALL MAST ARMS PERPENDICULAR TO THE ROADWAY CENTERLINE. ACCEPTABLE VARIANCE IS +/- 1-DEGREE.
4. SALVAGE SIGNAL POLE ASSEMBLIES, SIGNS, SIGNAL FACES, AND LUMINAIRES AND DELIVER TO MAINTENANCE AND OPERATIONS WITHIN 48-HOURS OF DECOMMISSIONING. COMPONENTS DAMAGED WHILE IN THE CONTRACTOR'S CUSTODY MUST BE REPLACED AT THE CONTRACTOR'S EXPENSE. REMOVE AND DISPOSE OF FOUNDATIONS.
5. SALVAGE EXISTING CONTROLLER CABINET AFTER NEW CONTROLLER CABINET IS IN SERVICE AND DELIVER TO MAINTENANCE AND OPERATIONS WITHIN 48-HOURS OF DECOMMISSIONING.
6. REMOVE ABANDONED OR UNUSED TRAFFIC JUNCTION BOXES UNLESS OTHERWISE NOTED.
7. NEW SIGNAL HEADS THAT ARE MOUNTED BUT NOT IN OPERATION SHALL BE COVERED WITH A COMMERCIALLY AVAILABLE SIGNAL-SHIRT. EACH SIGNAL SHIRT SHALL FEATURE ELASTICIZED OPENINGS THAT FIT OVER THE VISORS AND AT LEAST TWO STRAPS TO SECURE IT TO THE SIGNAL. PROVIDE SHIRTS WITH A LEGEND THAT READS "OUT OF SERVICE" AND A CENTER SECTION THAT ALLOWS AN OPERATOR TO SEE THE INDICATIONS DURING SYSTEM TESTS.
8. SIGNAL HEADS ARE TO BE LOCATED PER FIGURE 4D-100, TYPICAL SIGNAL HEAD LOCATIONS, PER THE ALASKA TRAFFIC MANUAL. ACCEPTABLE VARIANCE IS +/- 1-FOOT.
9. AIM SIGNALS PER TABLE 660-2, THROUGH-SIGNAL AIMING POINT, OF THE SPECIAL PROVISIONS. SIGNALS SHALL ALSO BE AIMED SO AS NOT TO BE VISIBLE FROM SIDE STREET TRAFFIC. ACCEPTABLE VARIANCE IS +/- 5 DEGREES.
10. EXISTING CIRCUITS LISTED ON THE LOAD CENTER SUMMARY AND PLAN SHEETS WERE OBTAINED FROM AS-BUILT INFORMATION AND MUST BE VERIFIED BY THE CONTRACTOR PRIOR TO WORK INVOLVING THOSE CIRCUITS.
11. CONTRACTOR SHALL PROVIDE TRAFFIC CONTROL, INCLUDING ARROW BOARD DEVICE(S), FOR OVERHEAD INSPECTION AND LOCATE WORK PERFORMED BY MOA SIGNAL ELECTRONICS. CONTRACTOR SHALL BE ON-SITE AT COMPLETION OF LOCATES TO REVIEW LAYOUT AND MAKE STATIONING MEASUREMENTS FOR CONDUIT LOCATIONS.

STATE OF ALASKA
PS&E REVIEW
AUGUST 2026
PROFESSIONAL ENGINEER

DOWL, LLC
5015 BUSINESS PARK BLVD
SUITE 4000
ANCHORAGE, AK 99503
(907) 562-2000
#AECL848 - AK

STATE OF ALASKA
DEPARTMENT OF TRANSPORTATION AND PUBLIC FACILITIES

HERMON RD EXTENSION AND UPGRADE, PARKS HWY TO PALMER-WASILLA HWY

TRAFFIC LEGENDS AND NOTES

NO.	DATE	REVISION

STATE	PROJECT DESIGNATION	YEAR	SHEET NO.	TOTAL SHEETS
ALASKA	0001729/CFHWY00799	2027	H3	H18

DESIGNED BY: SRT
CHECKED BY: KLK
DRAFTED BY: JHK

SCALE

DATE: 8/7/2026
TIME: 11:16 AM

DRAWING LOCATION
C:\DOWL_PW\0043398\00799_H_DTLS.DWG

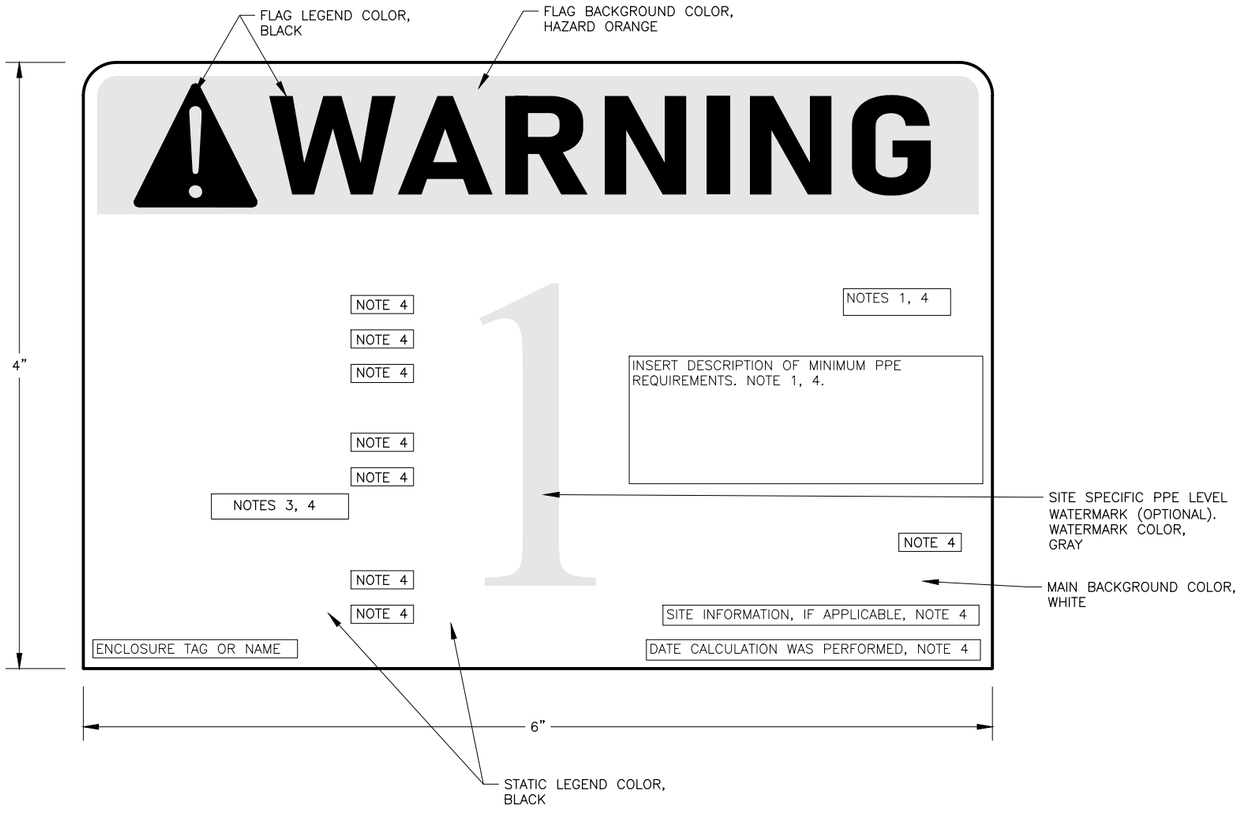

NOTES:

1. APPLICABLE STATE OF ALASKA DOT&PF ELECTRICAL EQUIPMENT MUST BE LABELED WITH DOT&PF–DEFINED SITE–SPECIFIC PPE LEVELS, AS DEFINED IN NFPA 70E 130.5(H)(3)(c). THE LEVELS ARE: LEVEL 1 (0 TO 4 CAL/CM^2), 2 (4.1 TO 8.0 CAL/CM^2), 3 (8.1 TO 25.0 CAL/CM^2), 4 (25.1 TO 39.9 CAL/CM^2), OR WP (WORK PROHIBITED, FOR EQUIPMENT IN WHICH THE CALCULATED ARC FLASH INCIDENT ENERGY IS ≥ 40 CAL/CM^2).
2. MINIMUM PPE REQUIREMENTS FOR EACH PPE LEVEL DESCRIBED IN NOTE 1 ARE THE SAME REQUIREMENTS AS DESCRIBED IN NFPA 70E TABLE 130.7(C)(15)(c). THESE PPE REQUIREMENTS ARE TO BE USED AS THE SITE–SPECIFIC PPE LEVELS.
3. PROVIDE DESCRIPTION OF EQUIPMENT CONFIGURATIONS IN WHICH A HAZARD EXISTS. FOR EXAMPLE "WHEN COVER REMOVED."
4. INSERT INFORMATION FROM PLAN SHEETS. REFER TO LOAD CENTER SUMMARY, ARC FLASH AND SHOCK HAZARD RESULTS, AND SHORT CIRCUIT CALCULATION TABLES PRESENTED IN THE PLANS FOR EACH LOAD CENTER.
5. FOR LOAD CENTERS INSTALLED WITHIN THE MUNICIPALITY OF ANCHORAGE, INSTALL A UTILITY INFORMATION LABEL ON THE EXTERIOR OF THE LOAD CENTER PER THE REQUIREMENTS OF THE MUNICIPALITY OF ANCHORAGE STANDARD SPECIFICATIONS (MASS) AND THE CEA ELECTRIC SERVICE REQUIREMENTS (ESR). LABEL MATERIALS SHALL BE 3M SCOTCHCAL 220 OR OTHER APPROVED EQUAL. LABEL SHALL BE IN PLACE PRIOR TO GREEN TAG INSPECTION. THE UTILITY INFORMATION LABEL SHALL INCLUDE THE FOLLOWING:
   - 5.1. LOAD CENTER OWNER: "MOA" OR "SOA"
   - 5.2. LOAD CENTER USAGE: "TS" FOR SIGNALIZATION, "LU" FOR LIGHTING AND OTHER USES
   - 5.3. LOAD CENTER VOLTAGE: "120/240" OR "240/480"

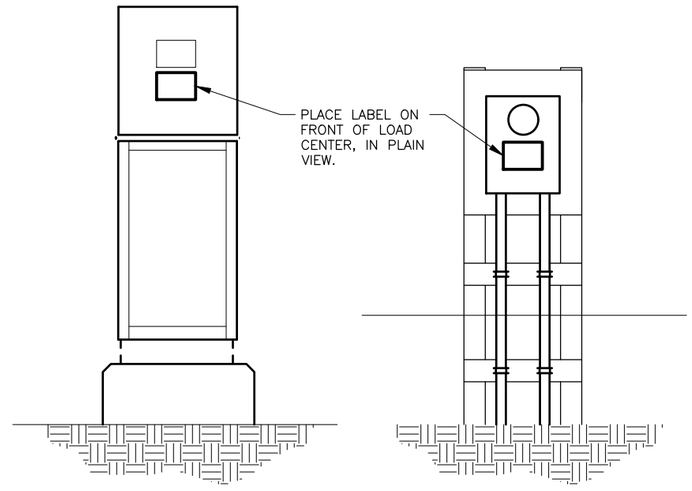

LABEL LOCATION

STATE OF ALASKA
PROFESSIONAL ENGINEER
PS&E REVIEW
AUGUST 2026

DOWL, LLC
5015 BUSINESS PARK BLVD
SUITE 4000
ANCHORAGE, AK 99503
(907) 562–2000
#AECL848 – AK

STATE OF ALASKA
DEPARTMENT OF TRANSPORTATION
AND PUBLIC FACILITIES

HERMON RD EXTENSION AND UPGRADE, PARKS HWY TO PALMER–WASILLA HWY

ARC FLASH AND SHOCK HAZARD LABELING DETAILS

NO.	DATE	REVISION

STATE	PROJECT DESIGNATION	YEAR	SHEET NO.	TOTAL SHEETS
ALASKA	0001729/CFHWY00799	2027	H4	H18

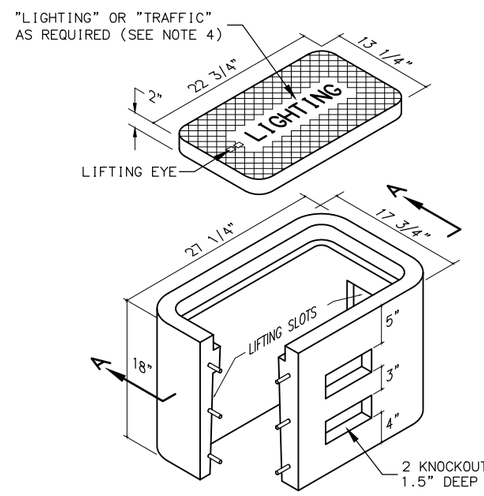

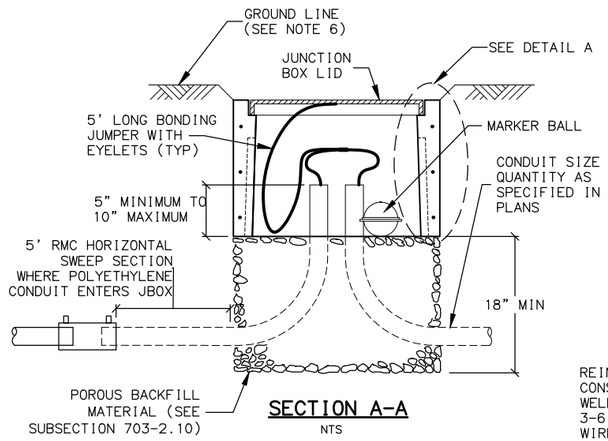

SECTION A-A
NTS

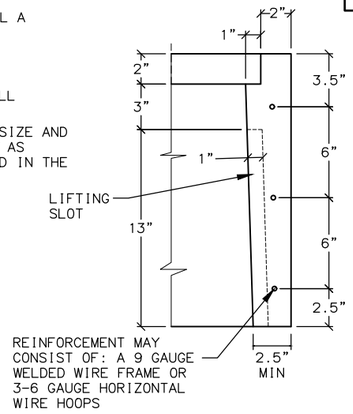

DETAIL A

TYPE IA JUNCTION BOX

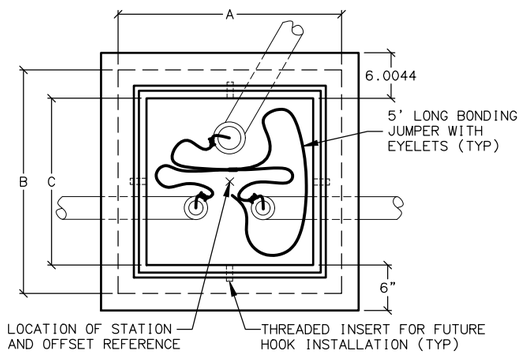

PLAN

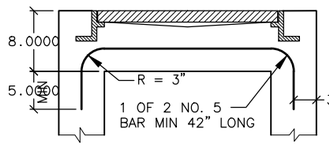

SECTION B-B

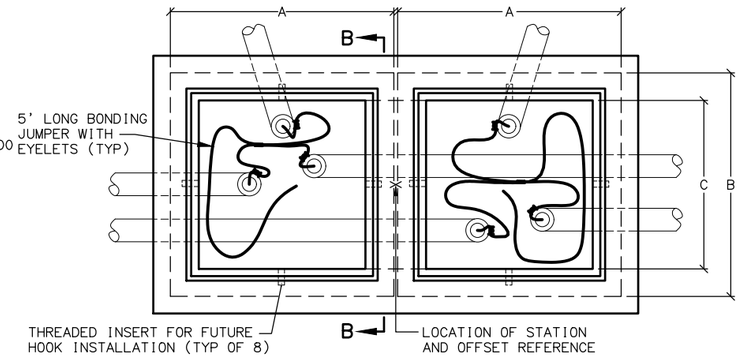

PLAN

NOTES:

1. AVOID INSTALLING TYPE IA JUNCTION BOXES IN DRIVEWAYS OR IN LOCATIONS SUBJECT TO USE BY HEAVY TRUCKS. INSTALL JUNCTION BOXES ONLY AT THE LATERAL LOCATIONS ALLOWED IN SUBSECTION 660-3.04.
2. FURNISH TYPE II, III AND IV JUNCTION BOXES WITH CAST IRON FRAMES AND LIDS THAT WEIGH A MINIMUM OF 210 POUNDS AND ARE RATED FOR HEAVY TRAFFIC LOADS IN COMPLIANCE WITH AASHTO M306. FURNISH TYPE IA JUNCTION BOXES WITH CAST IRON LIDS THAT WEIGH A MINIMUM OF 50 POUNDS.
3. CONSTRUCT JUNCTION BOXES ACCORDING TO SECTION 501 USING CLASS A CONCRETE. REINFORCE TYPE IA JUNCTION BOXES AS SHOWN. SYNTHETIC STRUCTURAL FIBER-REINFORCED CONCRETE THAT MEETS ASTM C 1116 AND CONTAINS FIBER IN PROPORTIONS AS RECOMMENDED BY THE FIBER MANUFACTURER MAY BE ADDED FOR STRENGTH.
4. FOR JUNCTION BOXES THAT CONTAIN ILLUMINATION CONDUCTORS EXCLUSIVELY, FURNISH LIDS WITH THE WORD "LIGHTING" INSCRIBED INTO THEM. FOR OTHER JUNCTION BOXES, FURNISH LIDS WITH THE WORD "TRAFFIC" INSCRIBED INTO THEM.
5. UNDER JUNCTION BOXES, INSTALL POROUS BACKFILL MATERIAL CONFORMING TO SUBSECTION 703-2.10.
6. SET THE TOPS OF JUNCTION BOXES WITH THE FOLLOWING DIMENSIONS BELOW THE FINISHED SURROUNDING SURFACE:
   - 1" IN PAVED MEDIANS AND ADJACENT TO PEDESTRIAN FACILITIES
   - 1/4" IN PEDESTRIAN FACILITIES
   - 2" IN ALL OTHER AREAS
7. BOND JUNCTION BOX LIDS TO THE SYSTEM OF EQUIPMENT GROUNDING CONDUCTORS ACCORDING TO SUBSECTION 660-3.06. ATTACH BONDING JUMPERS TO THE JUNCTION BOX LIDS WITH BRASS OR STAINLESS STEEL HARDWARE.
8. INSTALL LOOP DETECTOR TAILS THROUGH ONE OF THE KNOCKOUTS OF TYPE 1A JUNCTION BOXES. AFTER SETTING THE BOXES TO GRADE, INSTALL GROUT IN THE GAPS THAT REMAIN IN THE KNOCKOUT.
9. INSTALL A 1/2" THICK PREFORMED BITUMINOUS JOINT MATERIAL AROUND JUNCTION BOXES INSTALLED IN PORTLAND CEMENT CONCRETE WALKWAYS.
10. INSTALL AN ELECTRONIC MARKER BALL IN ALL JUNCTION BOXES PER SUBSECTION 660-3.04.
11. PRIOR TO INSTALLATION MARK ALL JUNCTION BOX LOCATIONS WITH A WIRE STAFF VINYL FLAG. THE FLAG SHALL BE RED IN COLOR AND MINIMUM 4-INCHES TALL BY 5-INCHES WIDE. THE WIRE STAFF SHALL BE 21-INCHES IN LENGTH AND CONSTRUCTED OF MINIMUM 15.5 GAUGE STEEL.
12. WHERE MODIFIED TYPE II JUNCTION BOXES ARE REQUIRED FOR DETECTOR LOOP TAIL INSTALLATIONS, ADD ONE(1) ADDITIONAL 5" DEEP X 3" HIGH X 18" WIDE KNOCKOUT 8" BELOW TOP OF JUNCTION BOX.

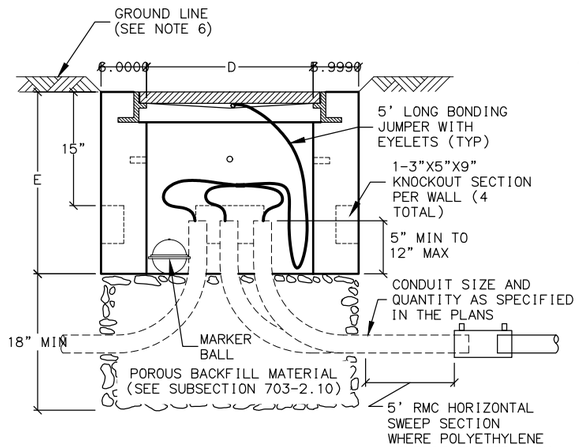

TYPE II JUNCTION BOX
ELEVATION
NTS

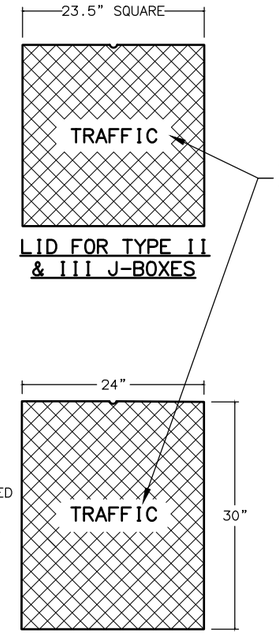

LID FOR TYPE II & III J-BOXES

LID FOR TYPE IV J-BOXES

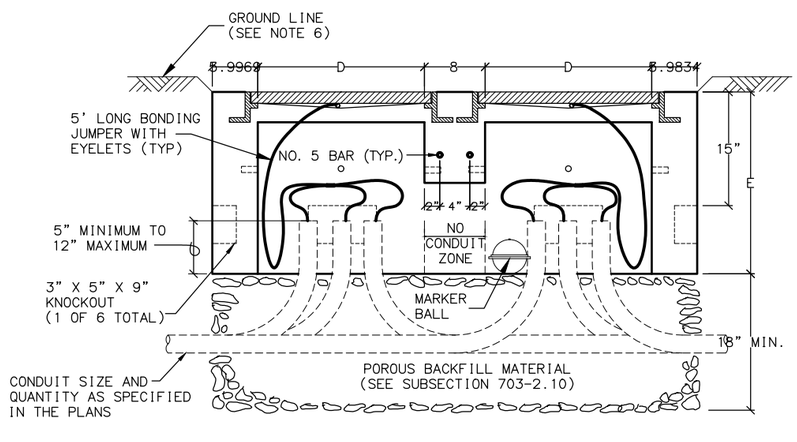

TYPE III/IV JUNCTION BOX
ELEVATION (TYPE III LAYOUT DEPICTED)

J-BOX DIMENSIONS

J-BOX TYPE	DIMENSIONS				
	A (MAX.)	B (MAX.)	C (MIN.)	D (MIN.)	E (MIN.)
II	29 1/2"	29 1/2"	22"	22"	24"
III	29 1/2"	29 1/2"	22"	22"	24"
IV	30"	36"	30"	24"	30"

STATE OF ALASKA
PS&E REVIEW
AUGUST 2026
PROFESSIONAL ENGINEER

DOWL, LLC
5015 BUSINESS PARK BLVD
SUITE 4000
ANCHORAGE, AK 99503
(907) 562-2000
#AECL848 - AK

STATE OF ALASKA
DEPARTMENT OF TRANSPORTATION AND PUBLIC FACILITIES

HERMON RD EXTENSION AND UPGRADE, PARKS HWY TO PALMER-WASILLA HWY

JUNCTION BOX DETAILS

DESIGNED BY SRT
CHECKED BY KLK
DRAFTED BY JHK
SCALE
DATE TIME 8/7/2026 11:16 AM
DRAWING LOCATION C:\DOWL_PW\00433398\00799_H_DTLS.DWG

NO.	DATE	REVISION

STATE	PROJECT DESIGNATION	YEAR	SHEET NO.	TOTAL SHEETS
ALASKA	0001729/CFHWY00799	2027	H5	H18

DESIGNED BY SRT
CHECKED BY KLK
DRAFTED BY JHK
SCALE
DATE TIME 8/7/2026 11:16 AM
DRAWING LOCATION C:\DOWL_PW\0043398\00799_H_DTLS.DWG

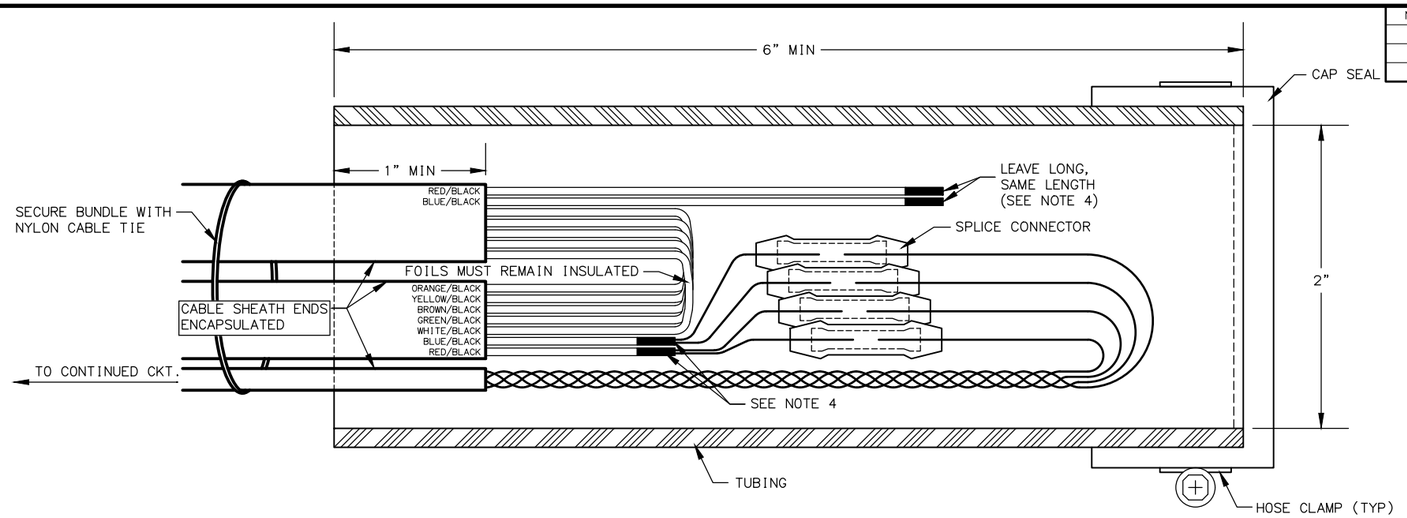

LOOP LEAD-IN SPLICE

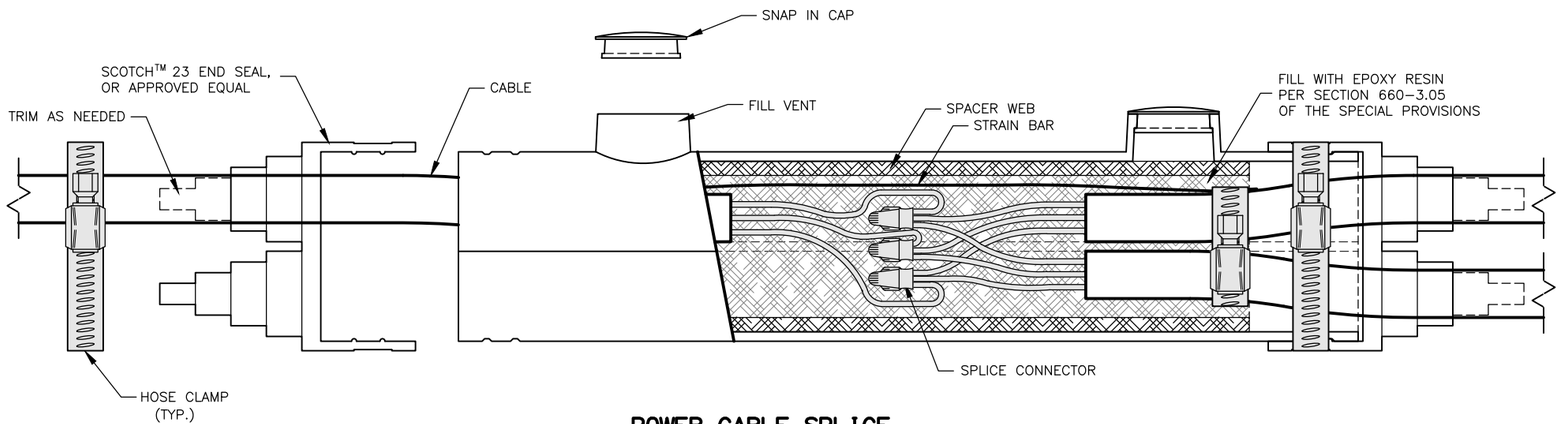

POWER CABLE SPLICE

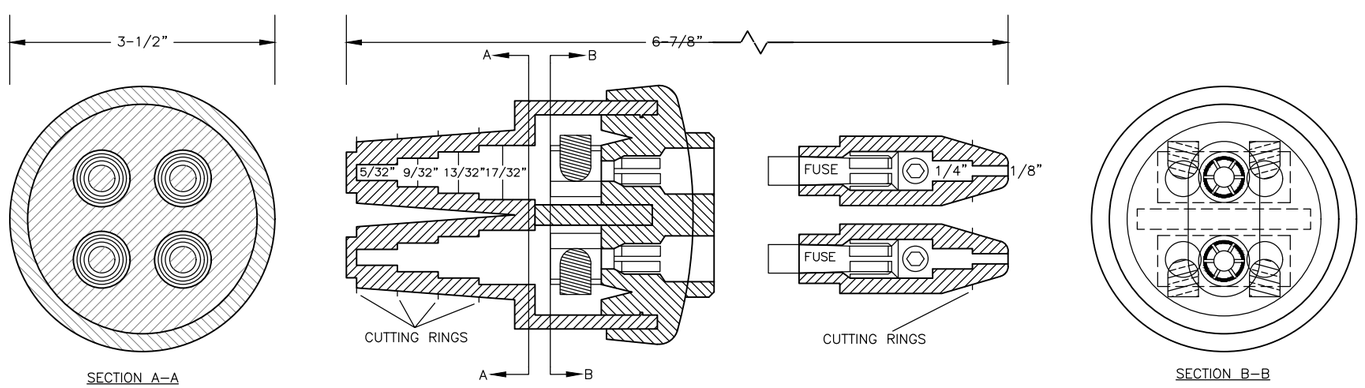

DOUBLE FUSED CONNECTOR

NOTES:

LOOP LEAD-IN SPLICE

1. FABRICATE LOOP LEAD-IN SPLICE IN THE FIELD AS SHOWN.
2. CAP SEAL ONE END AND COMPLETELY FILL OPEN END WITH RE-ENTERABLE ENCAPSULATION COMPOUND TO EDGE OF TUBING.
3. LEAVE A MINIMUM OF 1/2" CLEARANCE BETWEEN THE ENCLOSURE AND THE SPLICE AT BOTH ENDS OF THE TUBING.
4. EXPOSE FOIL AND DRAIN WIRES, SEAL WITH HEAT SHRINK TUBING (TYP).
5. INSTALL SPLICE CONNECTORS ACCORDING TO MANUFACTURER'S SPECIFICATIONS.

POWER CABLE SPLICE

6. SECURE CABLE/CONNECTOR BUNDLE WITH HOSE CLAMPS AS SHOWN.

MATERIAL PROPERTIES	
LOOP LEAD-IN SPLICE	
TUBING	PER SECTION 660-3.05
CAP SEAL	FERNCO QWIK CAP #QC-102, OR APPROVED EQUAL
HOSE CLAMP	STAINLESS STEEL
SPLICE CONNECTOR	ML56-16, OR APPROVED EQUAL
COMPOUND	RE-ENTERABLE ENCAPSULATION
POWER CABLE SPLICE	
SPLICE KIT	3M MODEL 78R, OR APPROVED EQUAL
SPLICE CONNECTOR	SCOTCHLOCK G, R, OR Y SPRING CONNECTOR, OR APPROVED EQUAL
HOSE CLAMP	(4)- STAINLESS STEEL
EPOXY RESIN	PER SECTION 660-3.05
DOUBLE FUSED CONNECTOR	
DOUBLE FUSED CONNECTOR	SEC-1791-DF-1, OR APPROVED EQUAL
FUSES	(2) - COMPATIBLE 5-AMP TIME DELAY TYPE FOR LED FIXTURE OR 10-AMP FAST ACTING FOR ALL OTHER FIXTURES

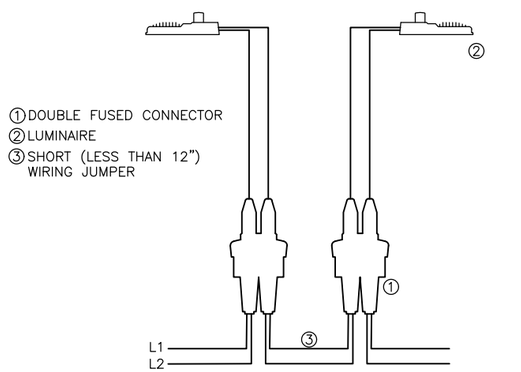

DUAL LUMINAIRE WIRING DIAGRAM

STATE OF ALASKA
DEPARTMENT OF TRANSPORTATION AND PUBLIC FACILITIES

HERMON RD EXTENSION AND UPGRADE, PARKS HWY TO PALMER-WASILLA HWY

SPLICE DETAILS

STATE OF ALASKA PROFESSIONAL ENGINEER PS&E REVIEW AUGUST 2026

DOWL, LLC
5015 BUSINESS PARK BLVD
SUITE 4000
ANCHORAGE, AK 99503
(907) 562-2000
#AECL848 - AK

NO.	DATE	REVISION

STATE	PROJECT DESIGNATION	YEAR	SHEET NO.	TOTAL SHEETS
ALASKA	0001729/CFHWY00799	2027	H6	H18

DESIGNED BY SRT
CHECKED BY KLK
DRAFTED BY JHK
SCALE
DATE TIME 8/7/2026 11:16 AM
DRAWING LOCATION C:\DOWL_PW\0043398\00799_H_DTLS.DWG

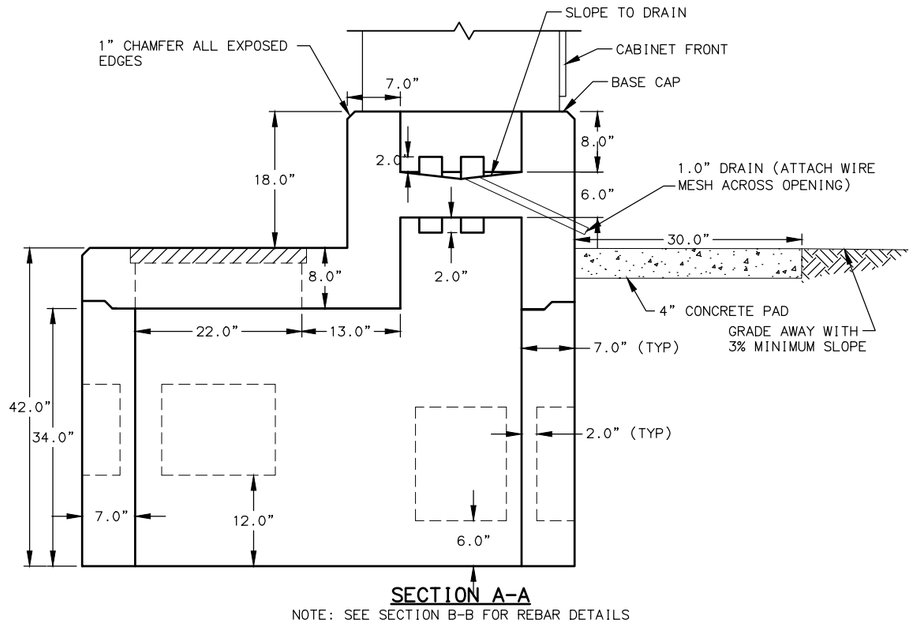

SECTION A-A

NOTE: SEE SECTION B-B FOR REBAR DETAILS

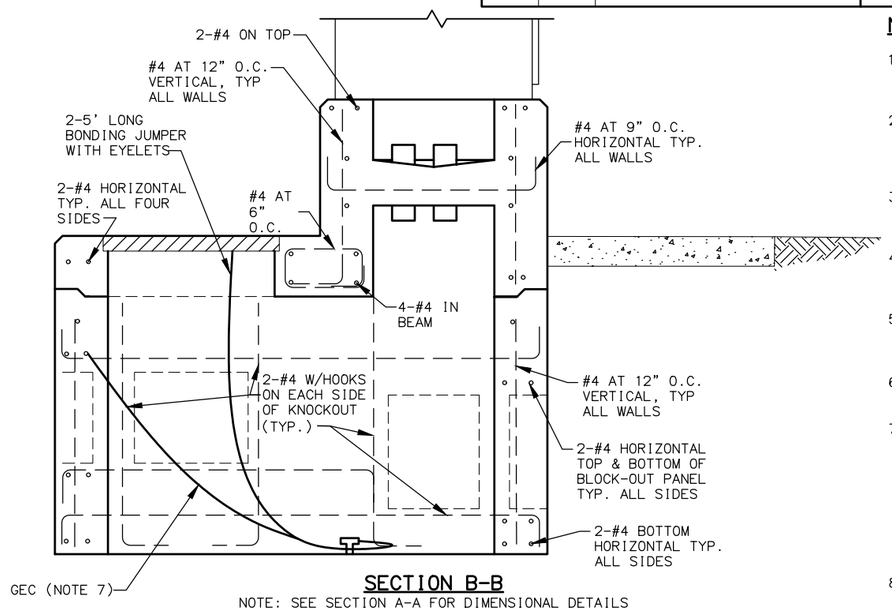

SECTION B-B

NOTE: SEE SECTION A-A FOR DIMENSIONAL DETAILS

NOTES:

1. ANCHOR BOLTS SHALL NOT PROTRUDE MORE THAN 1.5" ABOVE THE TOP OF THE FOUNDATION. ANCHOR BOLT DIMENSIONS SHALL BE AS SPECIFIED BY THE CABINET MANUFACTURER.
2. SEAL UNUSED CONDUIT STUBS WITH WATERTIGHT CAPS. SEAL STUBS CARRYING CONDUCTORS WITH WATERTIGHT SEALING BUSHINGS DESIGNED TO SEAL AROUND CONDUCTORS AND AGAINST THE CONDUIT WALLS.
3. ROUTE THE FIVE FOOT COPPER BONDING JUMPER THROUGH THE 2" PIPE NIPPLE AND ATTACH IT TO THE GROUNDING BUSHING ON THE FEEDER CONDUIT.
4. STOP HORIZONTAL & VERTICAL STEEL AT THE BLOCK-OUT PANELS & THE JOINT USING 90 DEGREE HOOKS. USE 2 EXTRA #4 HORIZONTAL & VERTICAL BARS. ALL SIDES AS SHOWN.
5. INSTALL TRAFFIC CONTROLLER CABINET FOUNDATION WITHIN 1-DEGREE OF PLUMB AND ORIENTED AS SHOWN IN PLANS SUCH THAT CABINET DOOR OPENS AWAY FROM INTERSECTION/TRAFFIC.
6. INSTALL #6 AWG COPPER GROUNDING ELECTRODE CONDUCTOR (GEC), OR SIZE PER NEC TABLE 250.66, WHICHEVER IS LARGER.
7. THE REINFORCING BARS WITHIN THE CONCRETE FOUNDATION MUST BE CONNECTED TOGETHER BY EFFECTIVE MEANS AND WILL BECOME PART OF THE GROUNDING ELECTRODE SYSTEM PER NEC 250.50 AND 250.52(A)(3). INSTALL AN IRREVERSIBLE COMPRESSION GROUNDING CONNECTOR, NRTL-LISTED FOR DIRECT BURIAL IN EARTH AND CONCRETE, TO CONNECT THE REINFORCING BARS TO THE GEC. INSTALL A COPPER GEC, SIZED PER NEC 250.66 BUT NOT SMALLER THAN #4 AWG, BETWEEN THE COMPRESSION CONNECTOR AND THE CONTROLLER CABINET GROUND BUS.
8. WHEN COMMUNICATION DROP POST IS CALLED FOR IN THE PLANS INSTALL A COMMERCIALLY TREATED 6" X 6" WOOD POST WITHIN 5' OF THE TRAFFIC CONTROLLER AND INSTALL CONDUIT AS SHOWN. STAKE THE LOCATION OF THE BURIED CONDUIT END TO BE USED BY THE UTILITY.

MATERIAL PROPERTIES		
CONCRETE	CLASS A	F'c = 4000 psi
REINFORCING STEEL	AASHTO M31 GRADE 60	Fy = 60 ksi
CONDUIT	RMC	
BONDING JUMPERS	3M 25T-BBE6 OR EQUAL	

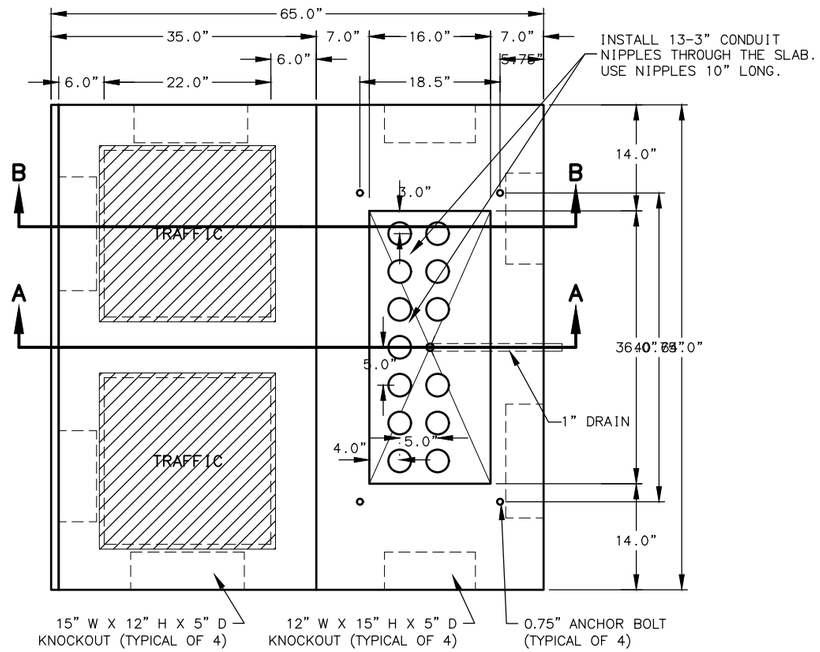

SIZE 6 OR 7 CONTROLLER CABINET FOUNDATION

NOTE: BOLT SPACING DIMENSIONS SHOWN FOR TS2 CONTROLLER CABINETS.

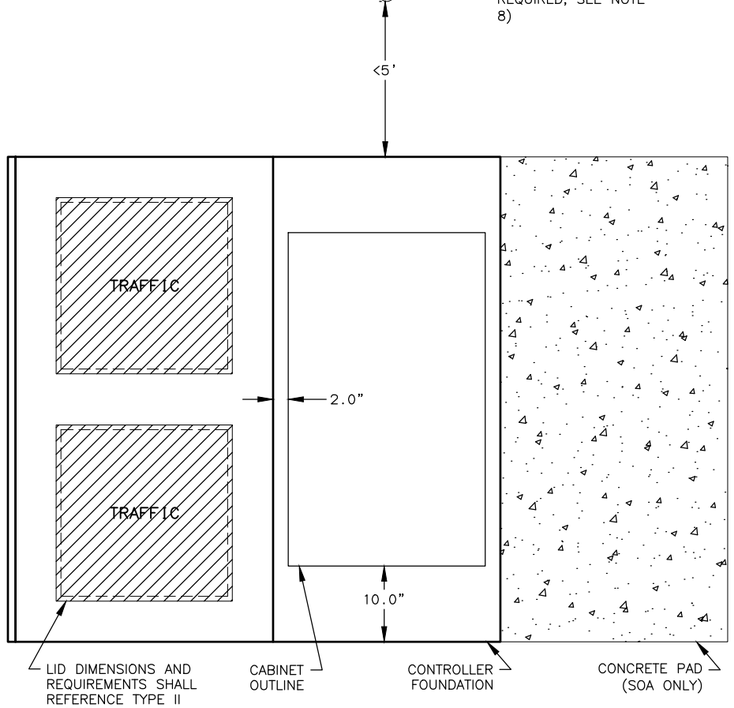

PLAN VIEW

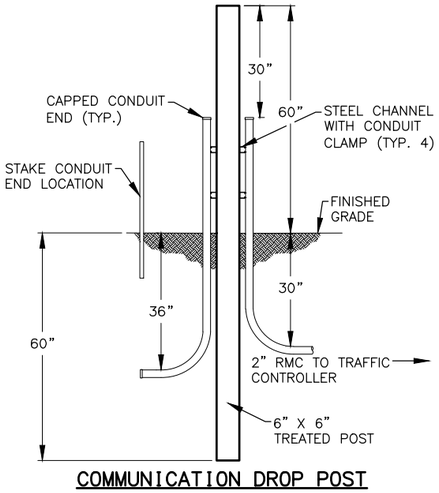

COMMUNICATION DROP POST

STATE OF ALASKA
PROFESSIONAL ENGINEER
PS&E REVIEW AUGUST 2026

DOWL, LLC
5015 BUSINESS PARK BLVD
SUITE 4000
ANCHORAGE, AK 99503
(907) 562-2000
#AECL848 - AK

STATE OF ALASKA
DEPARTMENT OF TRANSPORTATION AND PUBLIC FACILITIES

HERMON RD EXTENSION AND UPGRADE, PARKS HWY TO PALMER-WASILLA HWY

TS2 CONTROLLER CABINET FOUNDATION DETAILS

NO.	DATE	REVISION

STATE	PROJECT DESIGNATION	YEAR	SHEET NO.	TOTAL SHEETS
ALASKA	0001729/CFHWY00799	2027	H7	H18

DESIGNED BY SRT
CHECKED BY KLK
DRAFTED BY JHK

SCALE

DATE TIME 8/7/2026 11:16 AM

DRAWING LOCATION
C:_DOWL_PW\D0433398\00799_H_DTLS.DWG

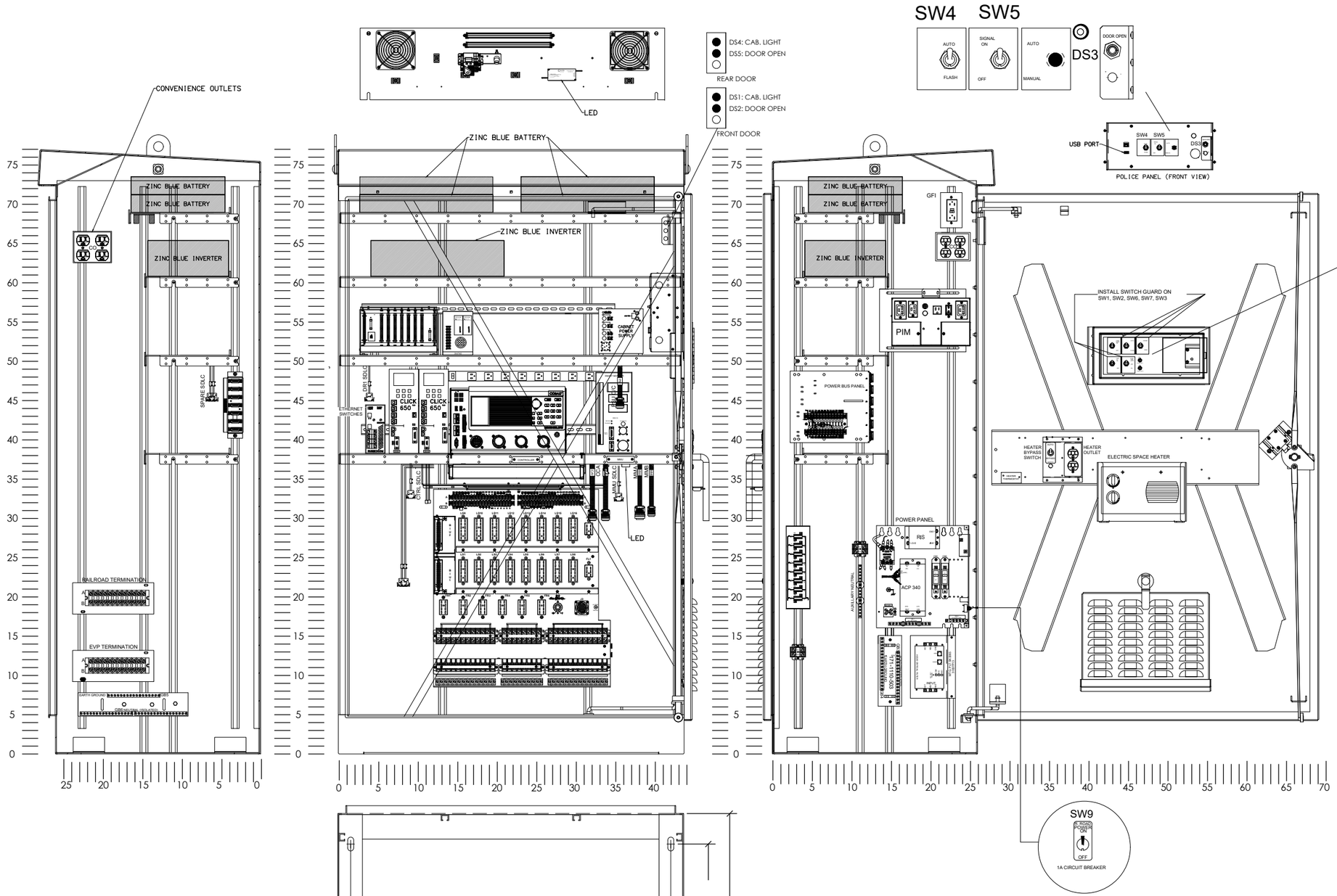

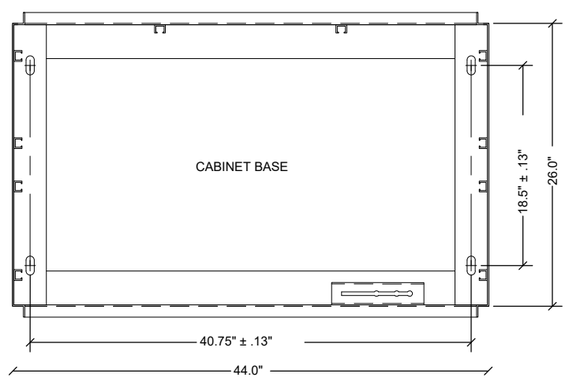

NOTES:

1. TYPICAL ECONOLITE CABINET LAYOUT. CABINET LAYOUT AND COMPONENTS VARY BY INTERSECTION.

PS&E REVIEW AUGUST 2026

DOWL, LLC
5015 BUSINESS PARK BLVD
SUITE 4000
ANCHORAGE, AK 99503
(907) 562-2000
#AECL848 – AK

STATE OF ALASKA
DEPARTMENT OF TRANSPORTATION
AND PUBLIC FACILITIES

HERMON RD EXTENSION AND UPGRADE, PARKS HWY TO PALMER–WASILLA HWY

TS2 SIZE 7 CONTROLLER ASSEMBLY DETAILS

NO.	DATE	REVISION

STATE	PROJECT DESIGNATION	YEAR	SHEET NO.	TOTAL SHEETS
ALASKA	0001729/CFHWY00799	2027	H8	H18

DESIGNED BY SRT
CHECKED BY KLK
DRAFTED BY JHK

SCALE

DATE TIME
8/7/2026 11:16 AM

DRAWING LOCATION
C:_DOWL_PW\D0433398\00799_H_DTLS.DWG

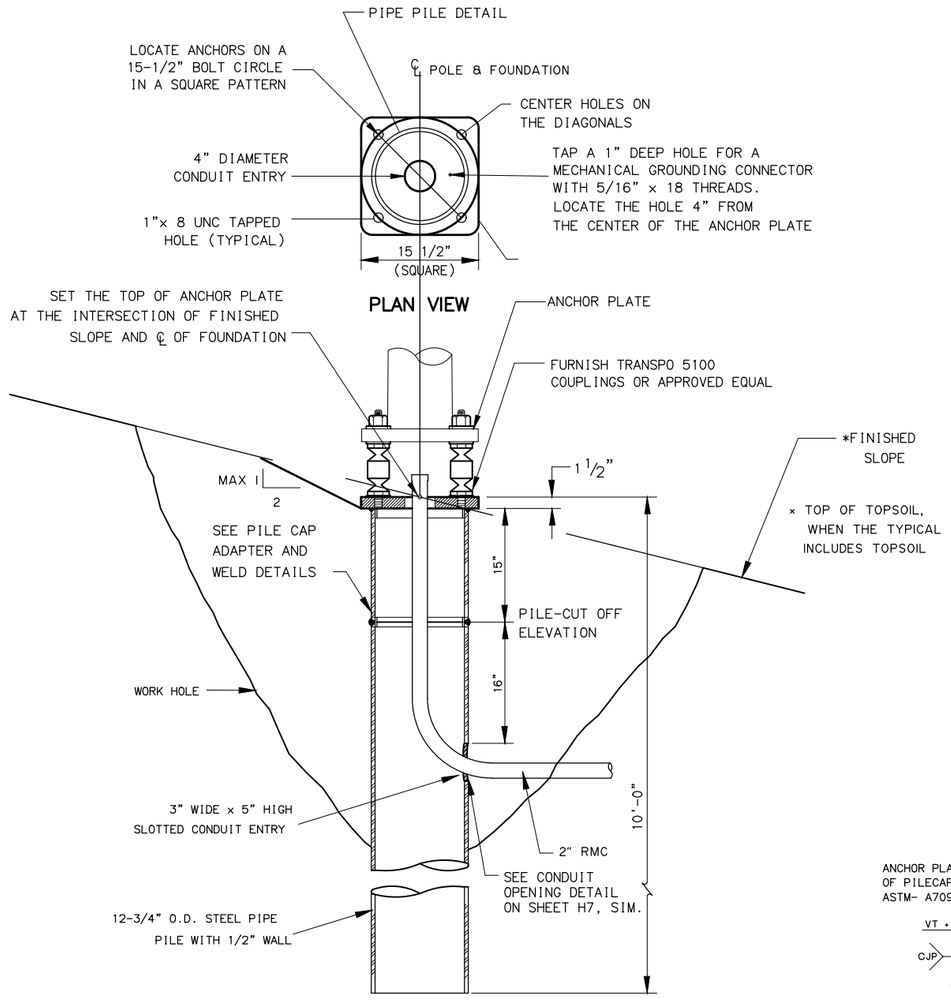

PIPE PILE FOUNDATION

(SHOWN WITH FRANGIBLE COUPLINGS)

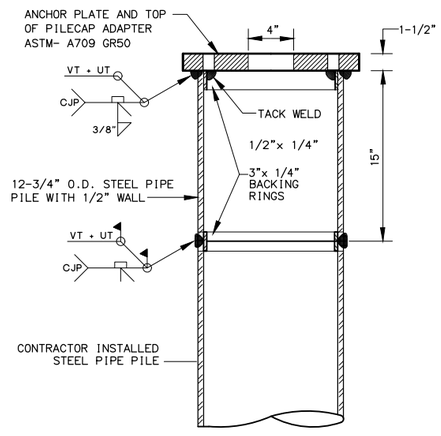

NOT TO SCALE

PILECAP ADAPTER AND WELD DETAILS

DESIGN NOTES:

1. DESIGN STANDARD: LRFD SPECIFIACTIONS FOR STRUCTURAL SUPPORTS FOR HIGHWAY SIGNS, LUMINAIRES, AND TRAFFIC SIGNALS, 1ST EDISTION (LRFD)
2. DESIGN LOADS: WIND = 130 MPH (LRFD FIG. 3.8-2A) AT TOP OF PILE:

   1)WIND LOAD: 1.5 KIPS AXIAL, 0.7 KIPS SHEAR, 16 KIP-FT MOMENT
   2)BREAKAWAY: 1.5 KIPS AXIAL, 22 KIPS SHEAR, 44 KIP-FT MOMENT
3. CHARPY TEST FOR ELECTROLIER POLE PILE FOUNDATIONS ARE NOT REQUIRED.

MATERIAL REQUIREMENTS		
STRUCTURAL STEEL PLATE	ASTM A709 GRADE 50	Fy = 50 ksi
STEEL PIPE PILE	ASTM A709, GRADE 50 T3	Fy = 50 ksi
	API 5L GRADE X 52	Fy = 52 ksi

NOTES:

1. DRIVE ALL PILES OPEN ENDED WITH FLUSH MOUNTED, HARDENED DRIVING SHOES. COMPLETE PILE DRIVING WORK IN ACCORDANCE WITH SECTIONS 505, 660 AND 715 OF THE STANDARD SPECIFICATIONS. INSTALLED PILE TO BE WITHIN 1/4" PER FOOT OF PLUMB. PILES OUT OF PLUMB MUST BE REMOVED AND REINSTALLED. CUT THE TOP OF THE PILE TO ACHIEVE PROPER ELEVATION. THE RESULTING BUTT JOINT ALIGNMENT SHALL MEET THE REQUIREMENTS OF AWS D1.1.
2. PILE MANUFACTURER TO PROVIDE THE REQUIRED PILE CAP ADAPTER. HOT DIP GALVANIZE THE ADAPTER TO WITHIN 3 INCHES OF THE TOE. DELIVER THE ADAPTER WITH ALL FASTENERS AND HARDWARE.
3. MACHINE OR PLASMA CUT ANY PENETRATION IN THE ADAPTER OR PILE. OXY-FUEL CUTTING IS PROHIBITED.
4. ALL WELDS TO BE SIZED BY THE MANUFACTURER. BOTH SHOP AND FIELD CJP WELDS TO BE 100% VISUALLY (VT) AND ULTRASONICALLY (UT) TESTED. SUBMIT WRITTEN RECORDS OF TESTS TO THE PROJECT ENGINEER.
5. MANUFACTURE THE ADAPTER TOP PLATE AND COMPONENTS FROM STEEL MEETING THE REQUIREMENTS OF ASTM A6. THE PERMISSIBLE BOW AND SWEEP OF THE ADAPTER TOP PLATE IS LIMITED TO 1/32". PLATE SHALL BE FLATTENED IN THE SHOP PRIOR TO FIT-UP AND WELDING IN THE SHOP. PRIOR TO HOT DIP GALVANIZING, BURRS AND IMPERFECTIONS SHALL BE REMOVED BY MILLING FOR ANY SURFACE NOT MEETING THIS SPECIFICATION. THE FLATNESS TOLERANCE LISTED HEREIN FOR THE ADAPTER TOP PLATE APPLIES TO THE FINAL FABRICATED PILE CAP ADAPTER. A MACHINING ALLOWANCE OF 1/4" HAS BEEN INCORPORATED INTO THE PILE CAP ADAPTER TOP PLATE FOR THE PURPOSE OF MEETING THIS REQUIREMENT.
6. HOT DIP GALVANIZE THE PILE TO WITHIN 3 INCHES OF THE TOP OF THE PILE PER AASHTO M111.
7. CONNECT THE GROUND WIRE TO THE PILE CAP ADAPTER TOP PLATE USING A BOLTED COMPRESSION FITTING WHICH IN TURN IS BOLTED TO THE TAPPED HOLE SHOWN ON THE DETAIL. GROUND WIRE SHALL BE BARE SOLID, STRANDED OR BRAIDED COPPER.
8. INSTALL THE PILE CAP ADAPTER TO WITHIN 0.1 DEGREES OF PLUMB.
9. IF PROVIDED COUPLINGS HAVE GREATER DESIGN VALUES THAN VU= 5.5 KIPS PER EACH COUPLING (22,000 LBS TOTAL), SUBMIT STAMPED ENGINEERING CALCULATIONS, RELATED DRAWINGS, AND OTHER NECESSARY INFORMATION AS REQUIRED TO VERIFY THE ADEQUACY OF THE FOUNDATION DESIGN FPR INCREASED LOADS. THE ASSUMED IMPACT HEIGHT IS 2'-0".
10. FRANGIBLE COUPLINGS SHALL BE NCHRP 350, TEST LEVEL 3 COMPLIANT AND INSTALLED IN ACCORDANCE WITH THE MANUFACTURERS WRITTEN INSTRUCTIONS.
11. FRANGIBLE COUPLINGS SHALL BE INSTALLED INTO FLUSH MOUNTED FEMALE ANCHORS SO THAT NO FIXED HARDWARE EXTENDS ABOVE THE FOUNDATION TOP.
12. INSTALL ALL COMPONENTS OF THE BREAKAWAY SUPPORT SYSTEM IN ACCORDANCE WITH THE MANUFACTURERS WRITTEN INSTRUCTIONS
13. AFTER THE FIELD WELDING, ELECTRICAL CONDUIT, AND ELECTRICAL CONDUCTOR WORK IS COMPLETE, BACKFILL AND COMPACT SOIL AROUND THE INSTALLED PILE IN ACCORDANCE WITH SECTION 205, SUBSECTIONS 203-3.04, 660-3.01 AND 660-3.02 OF THE SPECIFICATIONS. USE SELECT TYPE A MATERIAL ONLY AS BACKFILL.
14. WAIT AT LEAST 3 DAYS AFTER BACKFILLING THE WORK HOLE BEFORE ERECTING THE LUMINAIRE POLE.

STATE OF ALASKA
PROFESSIONAL ENGINEER
PS&E REVIEW
AUGUST 2026

DOWL, LLC
5015 BUSINESS PARK BLVD
SUITE 4000
ANCHORAGE, AK 99503
(907) 562-2000
#AECL848 - AK

STATE OF ALASKA
DEPARTMENT OF TRANSPORTATION
AND PUBLIC FACILITIES

HERMON RD EXTENSION AND UPGRADE, PARKS HWY TO PALMER-WASILLA HWY ELECTROLIER PIPE PILE FOUNDATION AND BREAKAWAY SUPPORT DETAIL

NO.	DATE	REVISION

STATE	PROJECT DESIGNATION	YEAR	SHEET NO.	TOTAL SHEETS
ALASKA	0001729/CFHWY00799	2027	H9	H18

DESIGNED BY SRT
CHECKED BY KLK
DRAFTED BY JHK
SCALE
DATE 8/7/2026 TIME 11:16 AM
DRAWING LOCATION C:\DOWL_PW\0043398\00799_H_DTLS.DWG

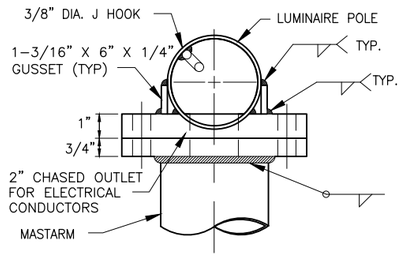

TOP VIEW

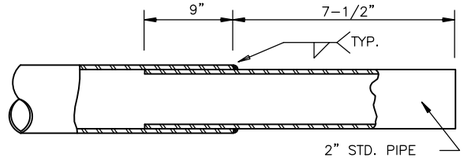

TENON

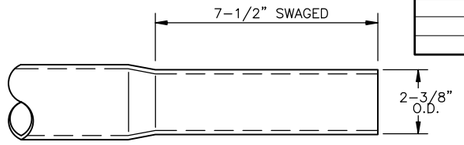

OPTIONAL SWAGED TENON

END OF MASTARM DETAIL

NTS

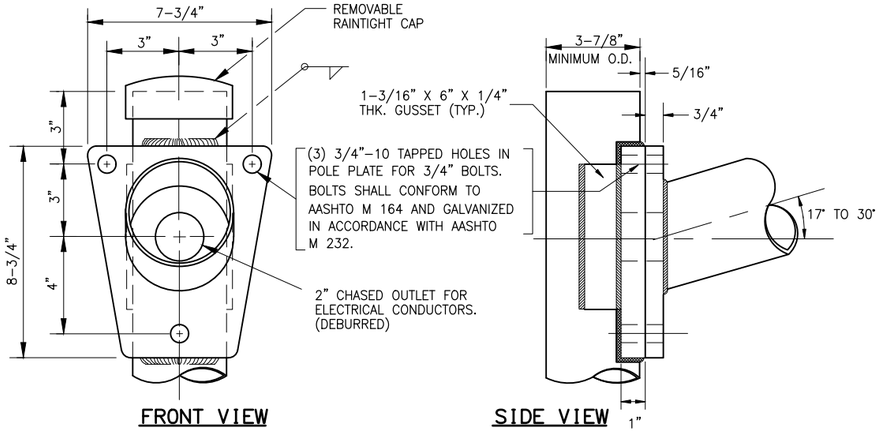

FRONT VIEW SIDE VIEW

MASTARM CONNECTION DETAIL

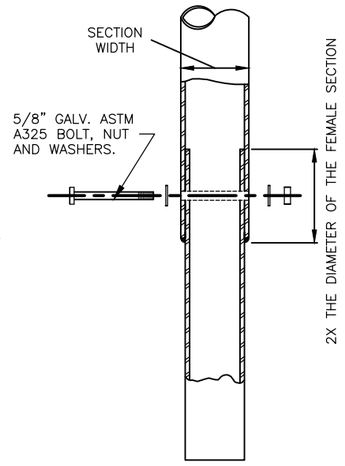

POLE CONNECTION DETAIL

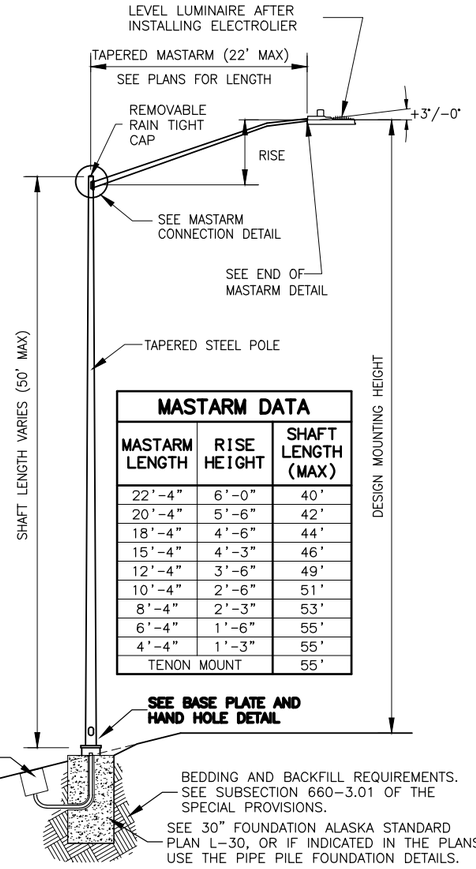

MASTARM DATA

MASTARM LENGTH	RISE HEIGHT	SHAFT LENGTH (MAX)
22'-4"	6'-0"	40'
20'-4"	5'-6"	42'
18'-4"	4'-6"	44'
15'-4"	4'-3"	46'
12'-4"	3'-6"	49'
10'-4"	2'-6"	51'
8'-4"	2'-3"	53'
6'-4"	1'-6"	55'
4'-4"	1'-3"	55'
TENON MOUNT		55'

ELECTROLIER ELEVATION
MASTARM TYPE

NOTES:

1. DESIGN AND FABRICATE ALL SHAFTS TO SUPPORT A MASTARM 22 FEET LONG WITH LUMINAIRE. ASSUME EACH LUMINAIRE WEIGHS 55 POUNDS AND HAS AN EFFECTIVE PROJECTED AREA OF 1.2 SQUARE FEET. WITH THIS DEAD LOAD, LIMIT THE ANGULAR ROTATION TO THE POLE TOP 1°40'0" MAXIMUM.
2. WELD SIZE TO BE DETERMINED BY THE MANUFACTURER.
3. MOUNTING HEIGHT, IF SPECIFIED IN THE PLANS, REFERS TO THE HEIGHT OF LUMINAIRE ABOVE THE ROADWAY. ADJUST EACH POLE'S SHAFT LENGTH TO MAINTAIN THIS DIFFERENCE IN ELEVATION WHENEVER SLOPE AND/OR OFFSET VARIES.
4. MINIMUM OUTSIDE DIAMETER AT THE TOP OF POLE EQUALS 3-7/8". POLE DIAMETER SHALL TAPER UNIFORMLY FROM THE TOP OF THE POLE TO THE BASE PLATE, WITH A MAXIMUM TAPER RATE OF 0.14" PER FOOT.
5. APPLY AN ANTI-SEIZING COMPOUND TO ALL THREADED SURFACES, INCLUDING THOSE IN THE ANCHOR PLATE AND ON THE COUPLINGS.
6. MASTARM RISE MAY VARY ±6" FROM THE VALUES LISTED IN THE TABLE.
7. LOCATE THE HANDHOLE AT 90 DEGREES TO THE MASTARM ON THE SIDE OF POLE DOWNSTREAM FROM TRAFFIC FLOW.
8. FURNISH ALL POLES WITH A J-HOOK TO SUPPORT THE ILLUMINATION TAP CONDUCTORS. FURNISH ALL MASTARM POLES WITH A REMOVABLE RAIN TIGHT CAP.
9. MOUNT LIGHTING STANDARDS UPON TRANSPO MODEL NO. 5100 FRANGIBLE COUPLINGS AND TRANSPO TYPE B FEMALE ANCHORS, OR APPROVED EQUAL.
10. INSTALL ALL COMPONENTS OF THE BREAKAWAY SUPPORT SYSTEM IN ACCORDANCE WITH THE MANUFACTURER'S WRITTEN INSTRUCTIONS.
11. FABRICATE THE SKIRT FROM FOUR PIECES OF 1/16" THICK 3003 H-14 ALUMINUM SHEET. BEND EACH PLATE TO PROVIDE CORNERS WITH A 3/4" RADIUS. ASSEMBLE THE SKIRT WITH #10 X 3/8" SELF TAPPING STAINLESS SCREWS OR POP RIVETS. THE ASSEMBLED SKIRT MEASURES ABOUT 12-3/4" SQUARE.
12. A JUNCTION BOX IS REQUIRED AT EACH NEW ELECTROLIER. INSTALL THE JUNCTION BOX IMMEDIATELY BEHIND THE FOUNDATION APPROXIMATELY 7' FROM POLE UNLESS OTHERWISE SPECIFIED IN THE PLANS.

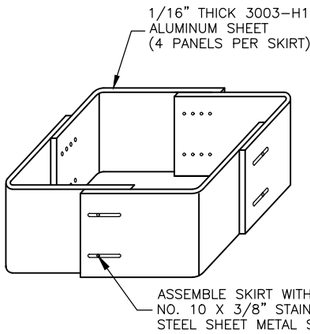

SKIRT DETAIL

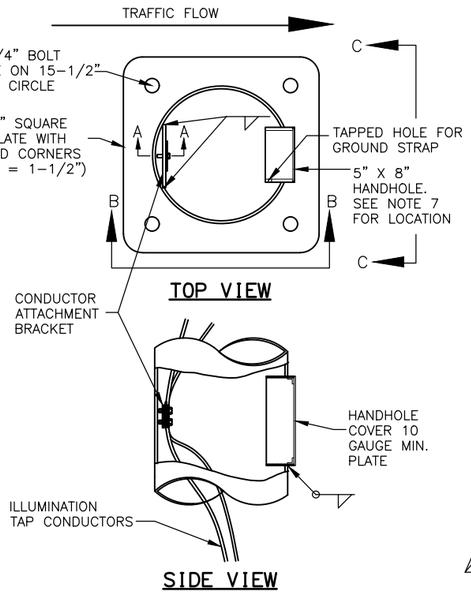

TOP VIEW SIDE VIEW

BASE PLATE AND HAND HOLE DETAIL

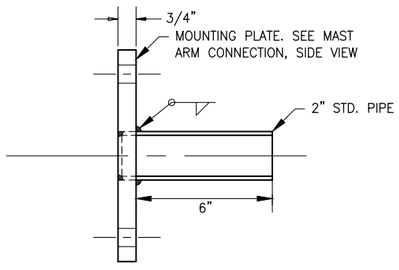

TENON MOUNT DETAIL

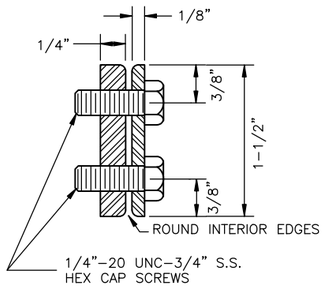

SECTION A-A

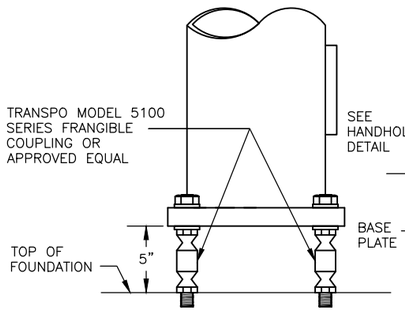

VIEW B-B

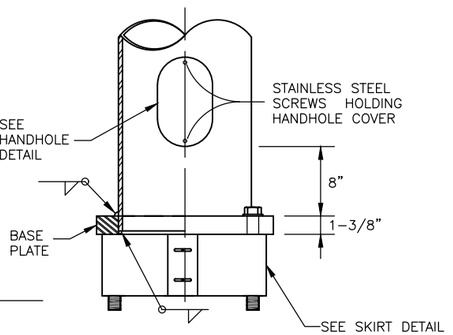

VIEW C-C

STATE OF ALASKA
PS&E REVIEW
AUGUST 2026
PROFESSIONAL ENGINEER

DOWL, LLC
5015 BUSINESS PARK BLVD
SUITE 4000
ANCHORAGE, AK 99503
(907) 562-2000
#AECL848 - AK

STATE OF ALASKA
DEPARTMENT OF TRANSPORTATION AND PUBLIC FACILITIES

HERMON RD EXTENSION AND UPGRADE, PARKS HWY TO PALMER-WASILLA HWY

LIGHTING STANDARD 1 DETAILS

NO.	DATE	REVISION

STATE	PROJECT DESIGNATION	YEAR	SHEET NO.	TOTAL SHEETS
ALASKA	0001729/CFHWY00799	2027	H10	H18

DESIGNED BY SRT
CHECKED BY KLK
DRAFTED BY JHK
SCALE
DATE TIME 8/7/2026 11:16 AM
DRAWING LOCATION C:\DOWL_PW\0043398\00799_H_DTLS.DWG

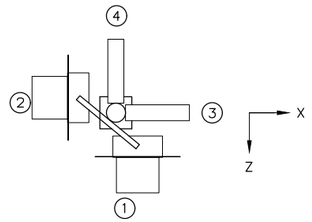

PLAN VIEW
NTS

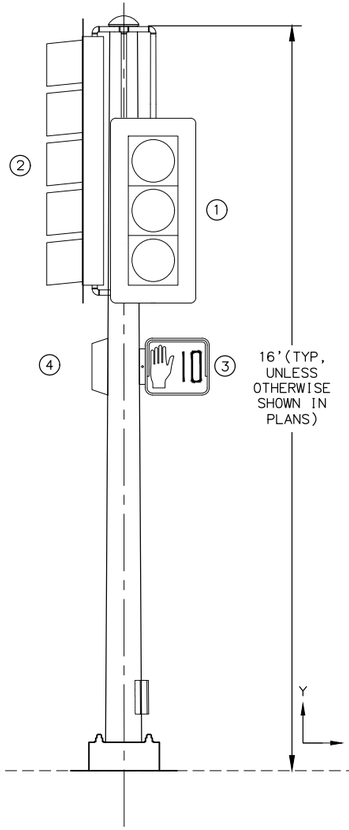

ELEVATION VIEW
NTS

FIXED DESIGN ELEMENTS

ALL ASSEMBLIES	
LENGTH	16'(TYP, MAY VARY IN PLANS)
FIXED END DIAMETER O.D.	10.0"
TAPER	0.14" /FT
TUBE THICKNESS	7 GA.
HAND-HOLE O.D.	5.63" X 7.31"
BASE PLATE	15.5" X 15.5" X 1.375"
BOLT CIRCLE	15.5"
MATERIAL PROPERTIES	
TUBE	ASTM A572 GR. 55
BASEPLATE	AASHTO M270 F3, GR 50
TOP PLATE	ASTM A36
HANDHOLE REINFORCEMENT	ASTM A53, GR. B
FINISH	AASHTO M111 & M232

POLE DESIGN LOADING

LOAD COMPONENT	EFFECTIVE AREA SQ. FT.	WEIGHT LBS.
1 = SIGNAL	7	60
2 = SIGNAL	11	100
3 = PED HEAD	2.5	25
4 = PED HEAD	2.5	25

SIDE MOUNT DETAIL

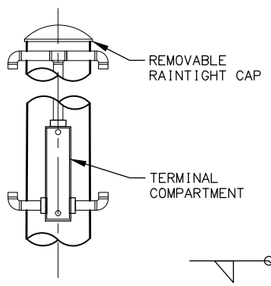

TOP MOUNT DETAIL

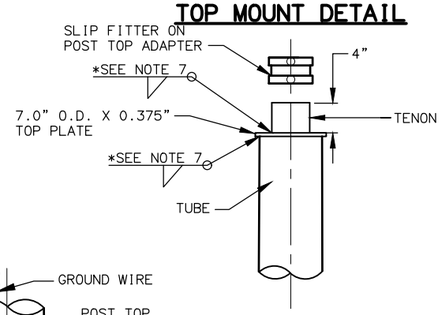

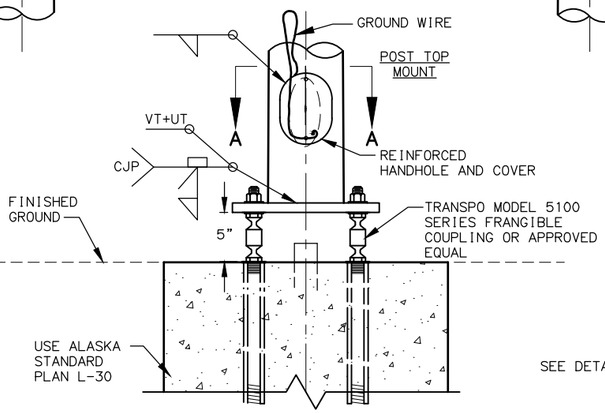

SIGNAL POST AND BASE
NTS

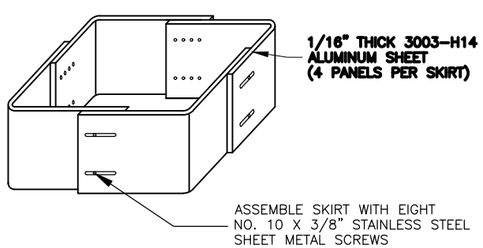

SKIRT DETAIL
NTS

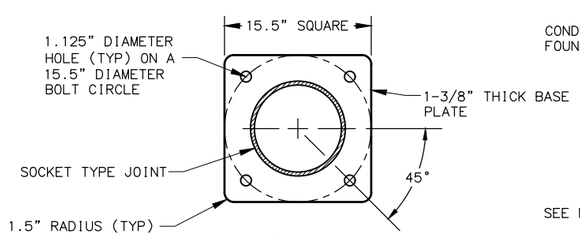

VIEW A-A
PLAN VIEW OF BASE PLATE
NTS

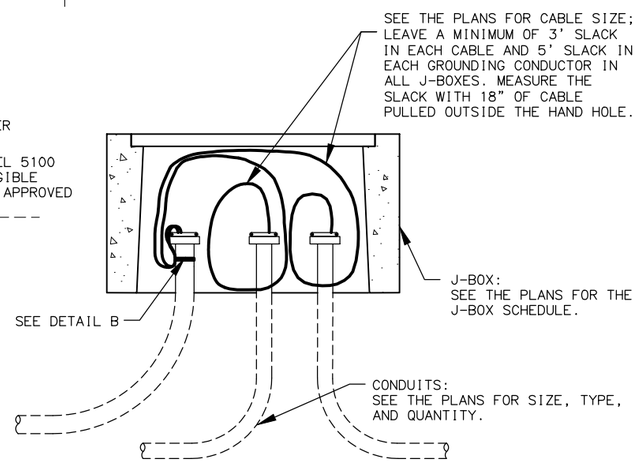

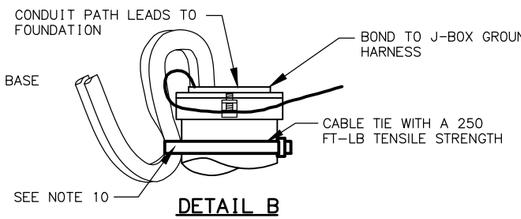

DETAIL B

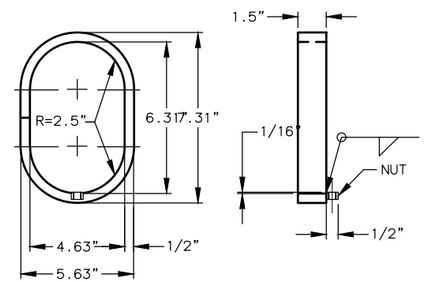

HANDHOLE DETAIL
NTS

NOTES:

1. DESIGN POLE ASSEMBLIES TO THE 2001 AASHTO STANDARD SPECIFICATIONS FOR STRUCTURAL SUPPORTS FOR HIGHWAY SIGNS, LUMINAIRE AND TRAFFIC SIGNALS, THE ALASKA STANDARD SPECIFICATIONS, STANDARD MODIFICATIONS, SPECIAL PROVISIONS AND THESE PLANS. DESIGN FOR A BASIC WIND SPEED OF 100 MPH, FATIGUE CATEGORY II.
2. POLES SHALL BE DESIGNED AND FABRICATED TO INCORPORATE ALL FIXED DESIGN ELEMENTS.
3. DESIGN AND FABRICATE TUBES FROM ONE PIECE OF TAPERED STEEL.
4. STEEL GREATER THAN 1/2" THICK SHALL CONFORM TO AASHTO M270 AND SHALL MEET THE FRACTURE CRITICAL CHARPY V-NOTCH IMPACT TEST REQUIREMENTS FOR ZONE 3.
5. FABRICATE THE SKIRT FROM FOUR PIECES OF 1/16" THICK 3003 H-14 ALUMINUM SHEET. BEND EACH PLATE TO PROVIDE CORNERS WITH A 3/4" RADIUS. ASSEMBLE THE SKIRT WITH #10 X 3/8" SELF TAPPING STAINLESS SCREWS OR POP RIVETS. THE ASSEMBLED SKIRT MEASURES ABOUT 12-3/4" SQUARE.
6. THE DEPARTMENT WILL REJECT DAMAGED OR DEFECTIVE POLES FOR ANY OF THE FOLLOWING, INCLUDING BUT NOT LIMITED TO;
   A. VARIANCES FROM APPROVED SHOP DRAWINGS.
   B. VARIANCES FROM FIXED DESIGN ELEMENTS.
   C. OUT OF ROUND. SECTIONS ARE OUT OF ROUND WHEN THE DIAMETERS OF ROUND MEMBERS EXCEED 2 PERCENT OF THE DIMENSION SPECIFIED ON THE SHOP DRAWINGS.
   D. BOWED WITH SWEEPS EXCEEDING 0.75" INCH THROUGHOUT THE LENGTH OF THE POLE, MASTARM, OR SEGMENT.
   E. DAMAGED OR DENTED FINISHES.
7. WELD SIZE TO BE DETERMINED BY MANUFACTURER.
8. PROVIDE PERMANENT TAGS PER SECTION 740 TABLE 740-1 OF THE SPECIFICATIONS.
9. THIS DRAWING IS INTENDED FOR POLE DESIGN PURPOSES ONLY. ASSEMBLY CONFIGURATIONS ARE FOR LOADING PURPOSES AND MAY DIFFER FROM THOSE SHOWN IN PLANS. POLES HAVE NOT BEEN EVALUATED FOR LOADING CONDITIONS MORE SEVERE THAN THOSE SHOWN AND WILL REQUIRE INDIVIDUAL ANALYSIS WHEN ENCOUNTERED.
10. BENDS MUST BE MADE SO AS NOT TO DAMAGE THE CABLE. DO NOT BEND BEYOND THE CABLE'S MINIMUM BEND RADIUS. USE 3.5" MINIMUM BEND RADIUS FOR 3C8 & 3C6 TYPE TC NON-SHEATHED CABLES.

STATE OF ALASKA
PS&E REVIEW
AUGUST 2026
PROFESSIONAL ENGINEER

DOWL, LLC
5015 BUSINESS PARK BLVD
SUITE 4000
ANCHORAGE, AK 99503
(907) 562-2000
#AECL848 - AK

STATE OF ALASKA
DEPARTMENT OF TRANSPORTATION
AND PUBLIC FACILITIES

HERMON RD EXTENSION AND UPGRADE, PARKS HWY TO PALMER-WASILLA HWY

BREAKAWAY TRAFFIC SIGNAL POLE DETAILS

NO.	DATE	REVISION

STATE	PROJECT DESIGNATION	YEAR	SHEET NO.	TOTAL SHEETS
ALASKA	0001729/CFHWY00799	2027	H11	H18

DESIGNED BY SRT
CHECKED BY KLK
DRAFTED BY JHK
SCALE
DATE TIME 8/7/2026 11:17 AM
DRAWING LOCATION C:\DOWL_PW\0043398\00799_H_DTLS.DWG

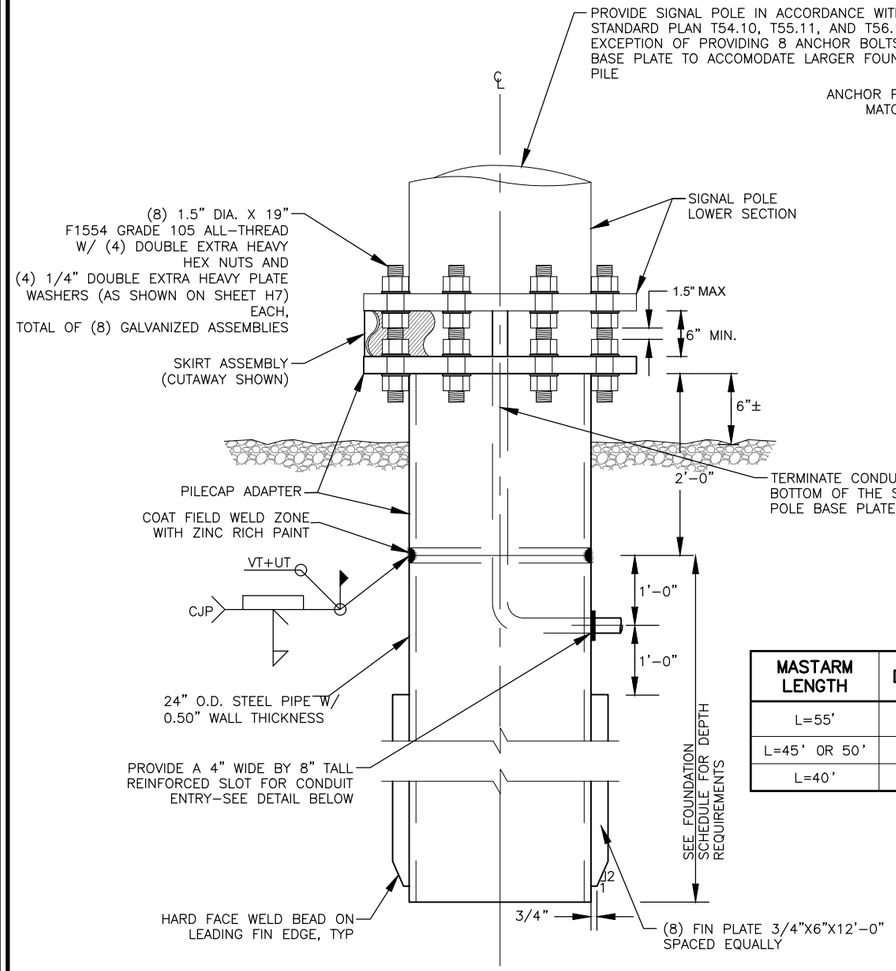

FOUNDATION DETAIL
N.T.S.

MASTARM LENGTH	DEPTH
L=55'	16 FT
L=45' OR 50'	14 FT
L=40'	13 FT

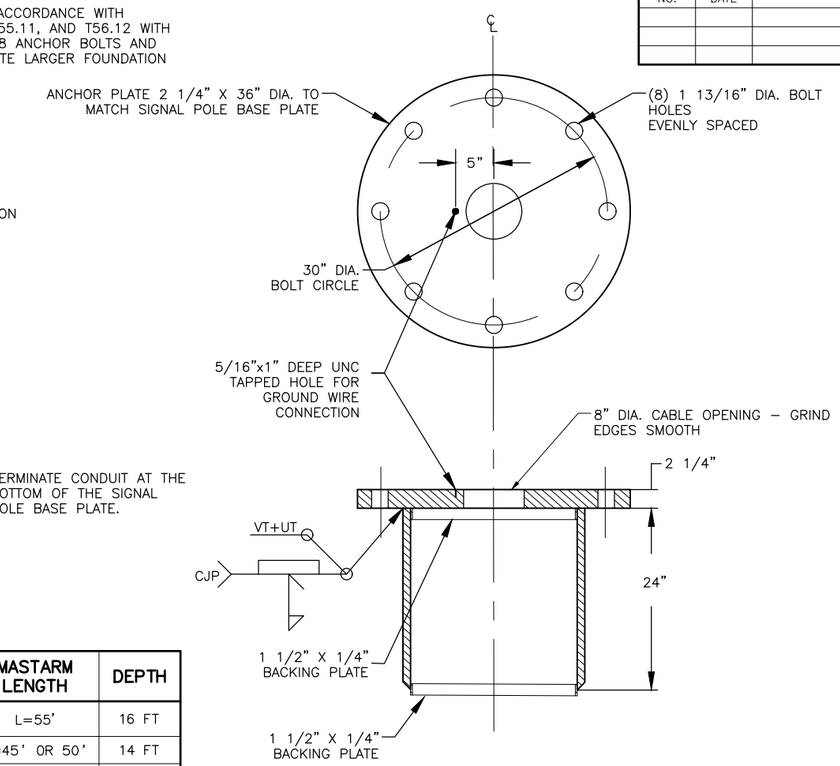

PILE CAP ADAPTER DETAIL
N.T.S.

NOTE: TACK WELD BACKING PLATE TO PIPE PILE SECTION

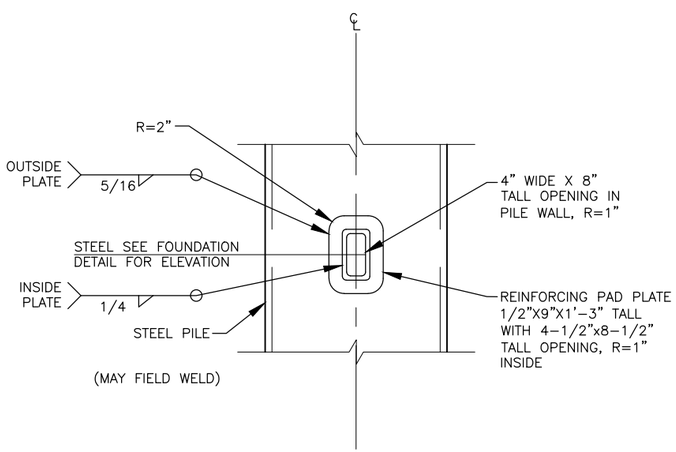

CONDUIT OPENING DETAIL
N.T.S.

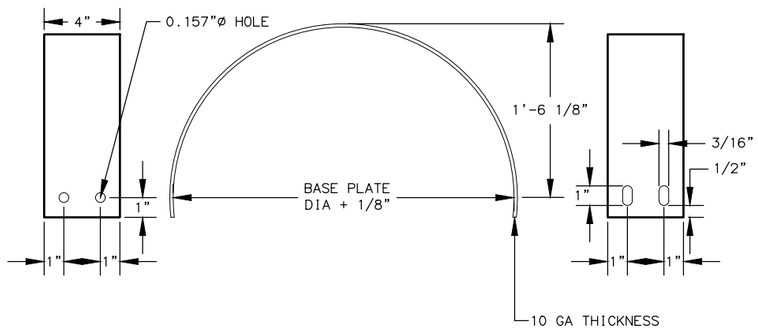

SKIRT DETAIL
N.T.S.

(TWO REQUIRED PER POLE)

MATERIAL PROPERTIES

ITEM	STANDARD	RATING
ANCHOR RODS, 1.5" X 19"	ASTM F1554	GRADE 105
FASTENERS, WASHERS	AASHTO M270	GRADE 36
FASTENERS, NUTS	AASHTO M292	
ANCHOR PLATE & BASE PLATE	AASTHO M270 F3	GRADE 50
PIPE PILE	ASTM A709 T3	GRADE 50
	API 5L	GRADE 52
FINISH, PIPE PILE AND ADAPTER	AASHTO M111	
FINISH, ANCHOR ROD AND FASTENERS	AASHTO M232	
GROUND WIRE		#4 AWG

DESIGN NOTES

1. DESIGN STANDARD: LRFD SPECIFICATIONS FOR STRUCTURAL SUPPORTS FOR HIGHWAY SIGNS, LUMINAIRES, AND TRAFFIC SIGNALS, 1ST EDITION (LRFD)
2. DESIGN LOADS: WIND= 130MPH (LRFD FIG. 3.8-2a)

   50'<L<=55' MASTARM: 9160 LBS SHEAR, 307 KIP-FT MOMENT AND 9000 LBS AXIAL

   40'<L<=50' MASTARM: 7580 LBS SHEAR, 187 KIP-FT MOMENT AND 7000 LBS AXIAL

   L<=40' MASTARM:7440 LBS SHEAR, 167 KIP-FT MOMENT AND 6,500 LBS AXIAL
3. CHARPY V-NOTCH TEST FOR SIGNAL POLE PILE FOUNDATIONS ARE NOT REQUIRED.

NOTES

1. DRIVE ALL PILES OPEN ENDED WITH FLUSH MOUNTED, HARDENED DRIVING SHOES. COMPLETE PILE DRIVING WORK IN ACCORDANCE WITH SECTIONS 505, 660 AND 715 OF THE STANDARD SPECIFICATIONS. INSTALLED PILE TO BE WITHIN 1:48 OF PLUMB. PILES OUT OF PLUMB MUST BE REMOVED AND REINSTALLED. CUT OF PILE TO ACHIEVE PROPER ELEVATION. THE RESULTING BUT JOINT ALIGNMENT SHALL MEET THE REQUIREMENTS OF AWS D1.1.
2. PILE MANUFACTURER TO PROVIDE THE REQUIRED PILE CAP ADAPTER, ADAPTER IS TO BE SHOP FABRICATED. HOT DIP GALVANIZE THE ADAPTER TO WITHIN 3 INCHES OF THE TOE. DELIVER THE ADAPTER WITH ALL FASTENERS AND HARDWARE.
3. MACHINE OR PLASMA CUT ANY PENETRATION IN THE ADAPTER OR PILE. ALL PENETRATIONS OF THE PILE AND/OR ADAPTER SHALL BE SMOOTH.
4. ALL WELDS TO BE SIZED BY THE MANUFACTURER UNLESS INDICATED. BOTH SHOP AND FIELD CJP WELDS TO BE 100% VISUALLY (VT) AND ULTRASONICALLY (UT) TESTED. SUBMIT WRITTEN RECORDS OF TESTS TO THE PROJECT ENGINEER.
5. MANUFACTURE THE ADAPTER TOP PLATE AND COMPONENTS FROM STEEL MEETING THE REQUIREMENTS OF ASTM A6. THE PERMISSIBLE BOW AND SWEEP OF THE ADAPTER TOP PLATE IS LIMITED TO 1/32". PLATE SHALL BE FLATTENED IN THE SHOP PRIOR TO FIT-UP AND WELDING IN THE SHOP. PRIOR TO HOT DIP GALVANIZING, BURRS AND IMPERFECTIONS SHALL BE REMOVED BY GRINDING OR MACHINING FOR ANY MATERIALS AND OR ASSEMBLIES NOT MEETING THESE REQUIREMENTS.
6. HOT DIP GALVANIZE THE PILE TO WITHIN 3 INCHES OF THE TOP OF THE PILE PER AASHTO M111.
7. CONNECT THE GROUND WIRE TO THE PIPE PILE ON THE INSIDE. GROUND WIRE SHALL BE BARE SOLID, STRANDED OR BRAIDED COPPER.
8. INSTALL THE PILE CAP ADAPTER TO WITHIN 1:48 OF PLUMB.
9. PROVIDE ANCHOR ROD MATERIAL MEETING THE REQUIREMENTS SHOWN ON THE DETAIL AND AS LISTED IN THE MATERIAL PROPERTIES TABLE. THE ANCHOR RODS ARE SUBJECT TO CHARPY V-NOTCH IMPACT TESTING. THE CONTRACTOR SHALL SUBMIT MILL CERTIFICATIONS FOR ANCHOR RODS, NUTS AND WASHERS. ANCHOR RODS ARE TO BE GALVANIZED THEIR FULL LENGTH. PROVIDE PERMANENT MANUFACTURER'S IDENTIFICATION AND PERMANENT GRADE SPECIFICATION ON EACH OF THE ANCHOR ROD BY MEANS OF A STEEL DIE STAMP. ANCHOR RODS TO BE SNUG-TIGHT TO THE POLE BASE PLATE AND PILE CAP ADAPTER TOP PLATE.
10. AFTER THE FIELD WELDING, ELECTRICAL CONDUIT AND ELECTRICAL CONDUCTOR WORK IS COMPLETE, BACKFILL AND COMPACT SOIL AROUND THE INSTALLED PILE IN ACCORDANCE WITH SECTION 205, SUBSECTIONS 203-3.04, 660-3.01 AND 660-3.02 OF THE SPECIFICATIONS. USE SELECT TYPE A MATERIAL ONLY AS BACKFILL.
11. SEE ALASKA STANDARD PLANS FOR ADDITIONAL SIGNAL POLE DETAILS NOT SHOWN HERE.
12. INSTALL A 10 GAUGE SHEET STEEL SKIRT AROUND THE SIGNAL POLE BASE AND PILE CAP FASTENED WITH STAINLESS SHEET METAL SCREWS. SIZE SKIRT TO COVER GAP BETWEEN SIGNAL POLE BASE PLATE AND PILE CAP WITH APPROXIMATELY 1" OVERLAP ON EACH PLATE. CONTRACTOR SHALL DRILL HOLES FOR MOUNTING 5/16" STAINLESS STEEL BOLTS WITH 5/16" ROD COUPLERS ON THE OPPOSITE SIDE OF PLATE. TWO ROD COUPLERS SHALL BE INSTALLED DIRECTLY ON TOP OF THE PILING PLATE. TWO ROD COUPLERS SHALL BE INSTALLED DIRECTLY BELOW POLE PLATE AND PERPENDICULAR TO THE FIRST SET OF ROD COUPLERS.
13. FOUNDATION DESIGN BASED ON GEOTECHNICAL DATA PROVIDED BY DOT&PF AT TEST HOLES TH24-18 AND TH24-19. IF SOILS ARE DIFFERENT THAN ASSUMED, CONTACT THE ENGINEER IMMEDIATELY.



DOWL, LLC
5015 BUSINESS PARK BLVD
SUITE 4000
ANCHORAGE, AK 99503
(907) 562-2000
#AECL848 - AK

STATE OF ALASKA
DEPARTMENT OF TRANSPORTATION AND PUBLIC FACILITIES

HERMON RD EXTENSION AND UPGRADE, PARKS HWY TO PALMER-WASILLA HWY

SIGNAL POLE PIPE PILE FOUNDATION DETAIL

NO.	DATE	REVISION

STATE	PROJECT DESIGNATION	YEAR	SHEET NO.	TOTAL SHEETS
ALASKA	0001729/CFHWY00799	2027	H12	H18

DESIGNED BY SRT
CHECKED BY KLK
DRAFTED BY JHK
SCALE
DATE TIME 8/7/2026 11:17 AM
DRAWING LOCATION C:\DOWL_PW\0043398\00799_H_DTLS.DWG

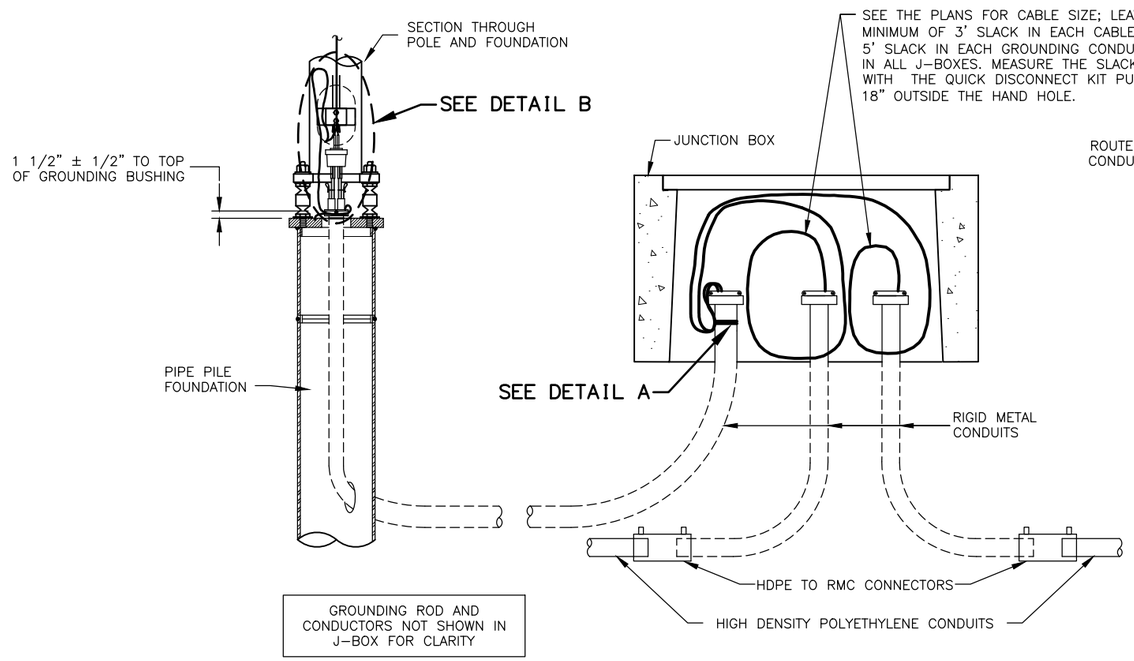

NOTES:

1. APPLICATION FOR SLIP BASE IS THE SAME EXCEPT FOR BONDING. SEE SUBSECTION 660-3.06 FOR BONDING.
2. LABEL ALL CABLES AND CONDUCTORS IN POLE BASE AND J-BOX. SEE SUBSECTION 660-3.05.
3. MAKE ALL GROUNDING AND BONDING WIRE #8 AWG, EXCEPT IN THOSE CONDUITS THAT CONTAIN CIRCUIT CONDUCTORS LARGER THAN #8 AWG. IN THIS CASE USE WIRE EQUAL IN SIZE TO THE LARGEST CONDUCTOR. THE GROUNDING ELECTRODE CONDUCTOR TO THE CONCRETE-ENCASED ELECTRODE IN THE FOUNDATION SHALL BE #4 AWG.
4. USE LISTED IRREVERSIBLE COMPRESSION TYPE CONNECTORS SIZED FOR EACH APPLICATION AND INSTALLED PER MANUFACTURERS SPECIFICATIONS.
5. WHEN PLANS INDICATE TWO FIXTURES ARE TO BE INSTALLED ON A SINGLE POLE, INSTALL A SECOND DOUBLE FUSED QUICK DISCONNECT KIT. USE TWO 12" (MAX.) JUMPER CABLES INSTALLED ON THE LINE SIDE OF THE FUSES AND SIZE THE JUMPER CABLES TO MATCH THE CABLES ENTERING THE FOUNDATION. EACH FIXTURE SHALL BE POWERED THROUGH A DEDICATED DOUBLE FUSED QUICK DISCONNECT KIT.
6. CONDUCTOR BENDS MUST BE MADE SO AS NOT TO DAMAGE THE CABLE. DO NOT BEND BEYOND THE CABLE'S MINIMUM BEND RADIUS. USE 3.5" MINIMUM BEND RADIUS FOR 3C8 & 3C6 TYPE TC NON-SHEATHED CABLES.

LIGHTING SYSTEM POLE AND J-BOX WIRING DETAILS

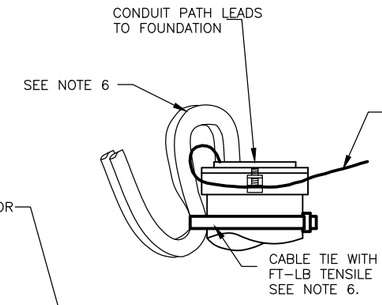

DETAIL A

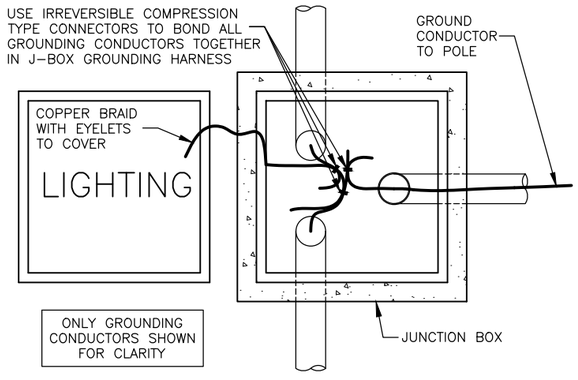

GROUNDING CONDUCTOR BONDING CONNECTIONS

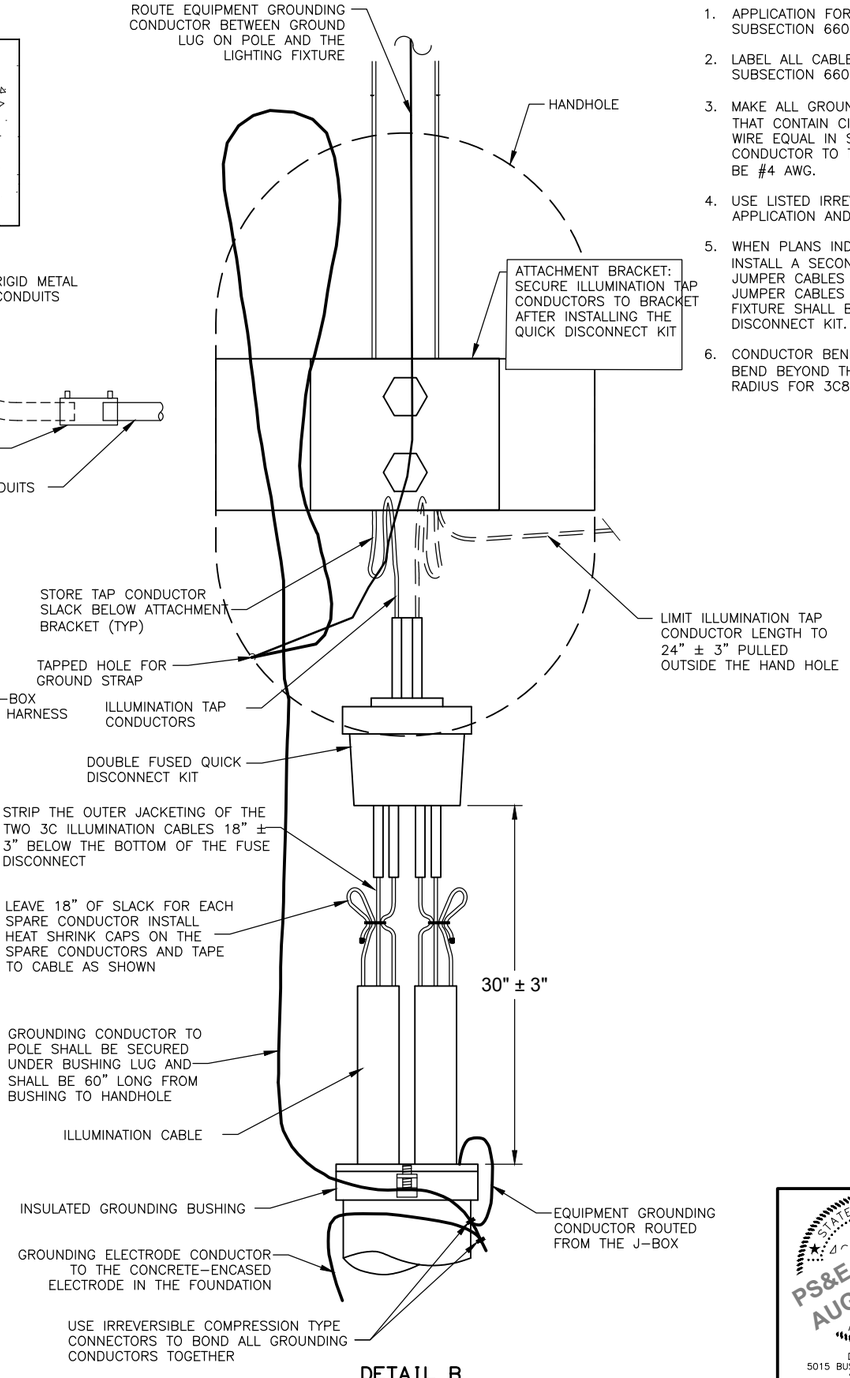

DETAIL B

STATE OF ALASKA
PS&E REVIEW
AUGUST 2026
PROFESSIONAL ENGINEER

DOWL, LLC
5015 BUSINESS PARK BLVD
SUITE 4000
ANCHORAGE, AK 99503
(907) 562-2000
#AECL848 - AK

STATE OF ALASKA
DEPARTMENT OF TRANSPORTATION
AND PUBLIC FACILITIES

HERMON RD EXTENSION AND UPGRADE, PARKS HWY TO PALMER-WASILLA HWY

TEMPORARY WOOD SIGNAL POLE DETAILS ABOVE GROUND SERVICE

NO.	DATE	REVISION

STATE	PROJECT DESIGNATION	YEAR	SHEET NO.	TOTAL SHEETS
ALASKA	0001729/CFHWY00799	2027	H13	H18

DESIGNED BY SRT
CHECKED BY KLK
DRAFTED BY JHK

SCALE

DATE TIME
8/7/2026 11:46 AM

DRAWING LOCATION
C:\DOWL_PW\D0433398\00799_H_DTLS.DWG

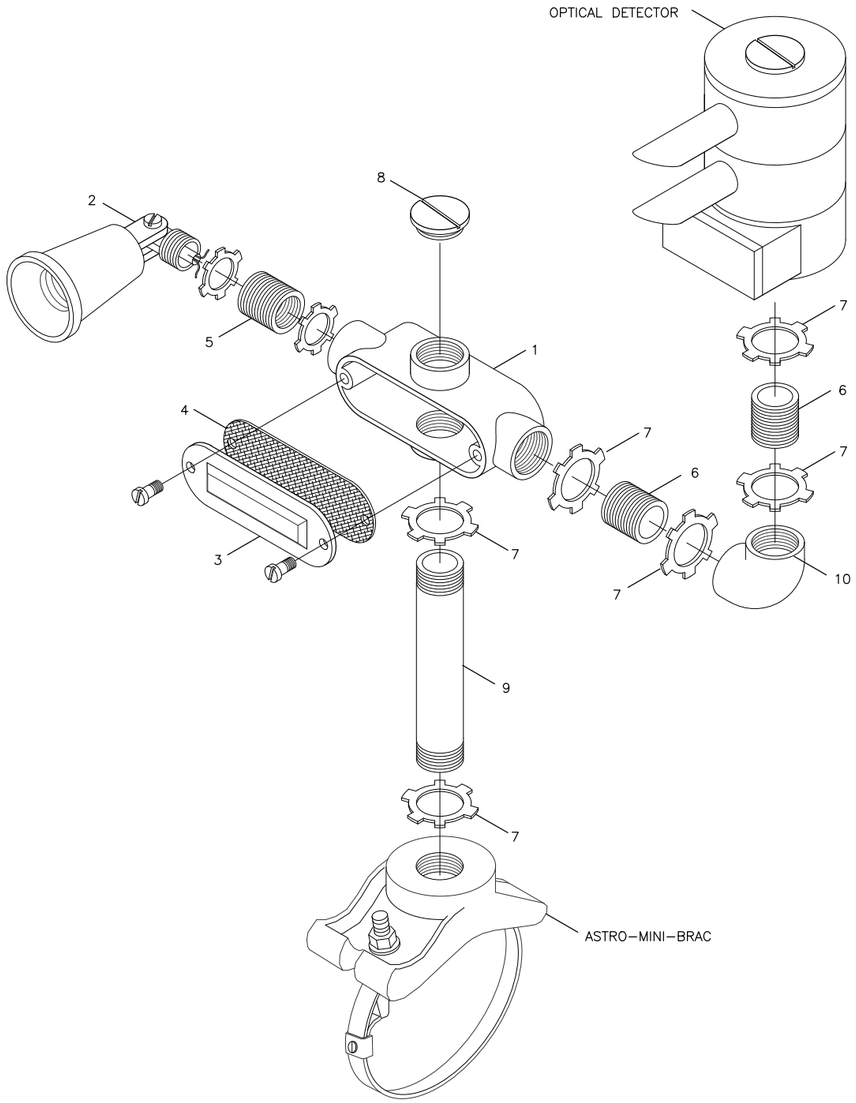

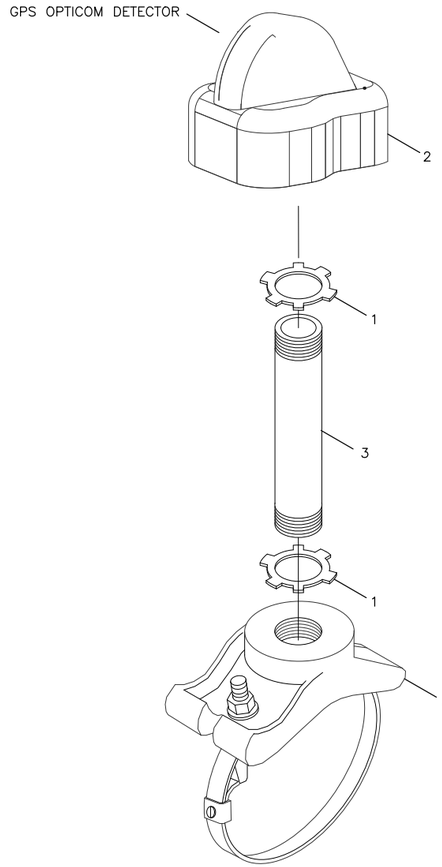

PARTS LIST FOR EACH GTT OPTICOM DETECTOR INSTALLED

GTT OPTICOM MODEL 575 CONFIRMATION LIGHT KIT
CONFIGURE AS SHOWN FROM PARTS BELOW

PART NO.	PART TYPE	LIGHT KIT QUANTITY
1	"X" CONDUIT BODY	1
2	PAR 38 LAMP HOLDER	2
3	CONDUIT COVER	1
4	COVER GASKET	1
5	REDUCING BUSHING	2
6	3/4" CLOSE NIPPLE	2
7	3/4" LOCKNUT	6
8	3/4" HOLE PLUG	2
9	3/4" X 6" NIPPLE	ADD 1 TO KIT
10	3/4" X 90° ELBOW	ADD 1 TO KIT

PARTS LIST FOR EACH GPS OPTICOM DETECTOR INSTALLED

GTT OPTICOM MODEL 3100 RADIO/GPS UNIT AS SHOWN FROM PARTS BELOW

PART NO.	PART TYPE	LIGHT KIT QUANTITY
1	3/4" LOCKNUT	2
2	GPS OPTICOM UNIT	1
3	3/4" X 6" NIPPLE	1

NOTES:

1. SEE THE SIGNAL PLANS FOR THE SIGNAL POLE MAST ARMS SCHEDULED FOR EVP INSTALLATION.
2. FOR EACH EVP INSTALLATION, FURNISH:
   A. A GTT MODEL 711, 721, 722 OPTICOM DETECTOR AS CALLED FOR IN PLANS.
   B. AN ASTRO–MINI–BRAC, MODEL AB–0155–L, AS MANUFACTURED BY PELCO PRODUCTS OR AN APPROVED EQUAL.
   C. A GTT MODEL 575 CONFIRMATION LIGHT KIT WITH THE ADDITIONAL PARTS SHOWN IN THE PARTS LIST, OR STEEL PARTS, WITH A HOT DIP GALVANIZED FINISH, AS SHOWN IN THE PARTS LIST.
   D. WITH EACH OPTICOM DETECTOR INSTALLED, FURNISH A PAR38 20 WATT LED FLOOD LAMP RATED FOR 120 VOLT OPERATION, 1250 INITIAL LUMENS, AND A 25000 HOUR LAMP LIFE.
3. MOUNT EVP DETECTORS TO HAVE DIRECT, UNOBSTRUCTED LINE–OF–SIGHT OF APPROACHING VEHICLES. DRILL A 1 INCH HOLE IN THE TOP DEAD CENTER OF THE MAST ARM AT THE LOCATION PRE–APPROVED BY THE ENGINEER. ASSEMBLE AND TIGHTEN THE PARTS AND LOCKNUTS AS SHOWN ON THIS SHEET.
4. BEFORE ATTACHING THE MODEL 138 DETECTOR CABLE TO THE OPTICOM DETECTOR, STRIP THE INSULATION FROM THE THREE INSULATED CONDUCTORS AT THE CONTROLLER CABINET AND ATTACH ALL FOUR CONDUCTORS TO GROUND.
5. PREEMPTION EMITTERS SHALL BE ASSIGNED ID NUMBERS BY JURISDICTION AS SHOWN IN VEHICLE EMITTER TABLE.

GPS NOTES:

1. SEE THE SIGNAL PLANS FOR THE SIGNAL POLE MAST ARM SCHEDULED FOR GPS OPTICOM SYSTEM INSTALLATION.
2. FOR EACH GPS OPTICOM SYSTEM INSTALLATION, FURNISH:
   A. A GTT MODEL 3100 GPS DETECTOR AS CALLED FOR IN PLANS.
   B. AN ASTRO–MINI–BRAC, MODEL AB–0155–L, AS MANUFACTURED BY PELCO PRODUCTS OR AN APPROVED EQUAL.
3. MOUNT DETECTORS PER MANUFACTURER RECOMMENDATIONS. DRILL A 1 INCH HOLE IN THE TOP DEAD CENTER OF THE MAST ARM AT THE LOCATION PRE–APPROVED BY THE ENGINEER. ASSEMBLE AND TIGHTEN THE PARTS AND LOCKNUTS AS SHOWN ON THIS SHEET.
4. INSTALL OPTICOM MODEL 1070 GPS INSTALLATION CABLE BETWEEN THE SIGNAL CABINET AND THE GPS UNIT PER MANUFACTURER RECOMMENDATIONS. LEAVE APPROXIMATELY 10 FEET OF THE MODEL 1070 CABLE SPOOLED IN THE TRAFFIC CONTROLLER CABINET.
5. PREEMPTION EMITTERS SHALL BE ASSIGNED ID NUMBERS BY JURISDICTION AS SHOWN IN VEHICLE EMITTER TABLE.

VEHICLE EMITTER TABLE

CLASS	VEHICLE I.D. NO.	JURISDICTION	VEHICLE TYPE
0	NOT USED	MUNICIPALITY OF ANCHORAGE	FIRE & EMS
1	NOT USED	MUNICIPALITY OF ANCHORAGE	OTHER
2	NOT USED	FAIRBANKS	FIRE & EMS
3	NOT USED	FAIRBANKS	OTHER
4	1–30	MATANUSKA/SUSITNA	FIRE & EMS
5	NOT USED	MATANUSKA/SUSITNA	OTHER
6	NOT USED	KENAI PENINSULA	FIRE & EMS
7	NOT USED	KENAI PENINSULA	OTHER
8	NOT USED	ELMENDORF/FT. RICHARDSON	FIRE & EMS
9	NOT USED	ELMENDORF/FT. RICHARDSON	OTHER

STATE OF ALASKA
PS&E REVIEW
AUGUST 2026
PROFESSIONAL ENGINEER

DOWL, LLC
5015 BUSINESS PARK BLVD
SUITE 4000
ANCHORAGE, AK 99503
(907) 562–2000
#AECL848 – AK

STATE OF ALASKA
DEPARTMENT OF TRANSPORTATION
AND PUBLIC FACILITIES

HERMON RD EXTENSION AND UPGRADE, PARKS HWY TO PALMER–WASILLA HWY

TEMPORARY TRAFFIC SIGNAL SPAN WIRE DETAIL

NO.	DATE	REVISION

STATE	PROJECT DESIGNATION	YEAR	SHEET NO.	TOTAL SHEETS
ALASKA	0001729/CFHWY00799	2027	H14	H18

DESIGNED BY SRT
CHECKED BY KLK
DRAFTED BY JHK

SCALE

DATE TIME
8/7/2026 11:47 AM

DRAWING LOCATION
C:\DOWL_PW\0043398\00799_H_DTLS.DWG

LOCATION

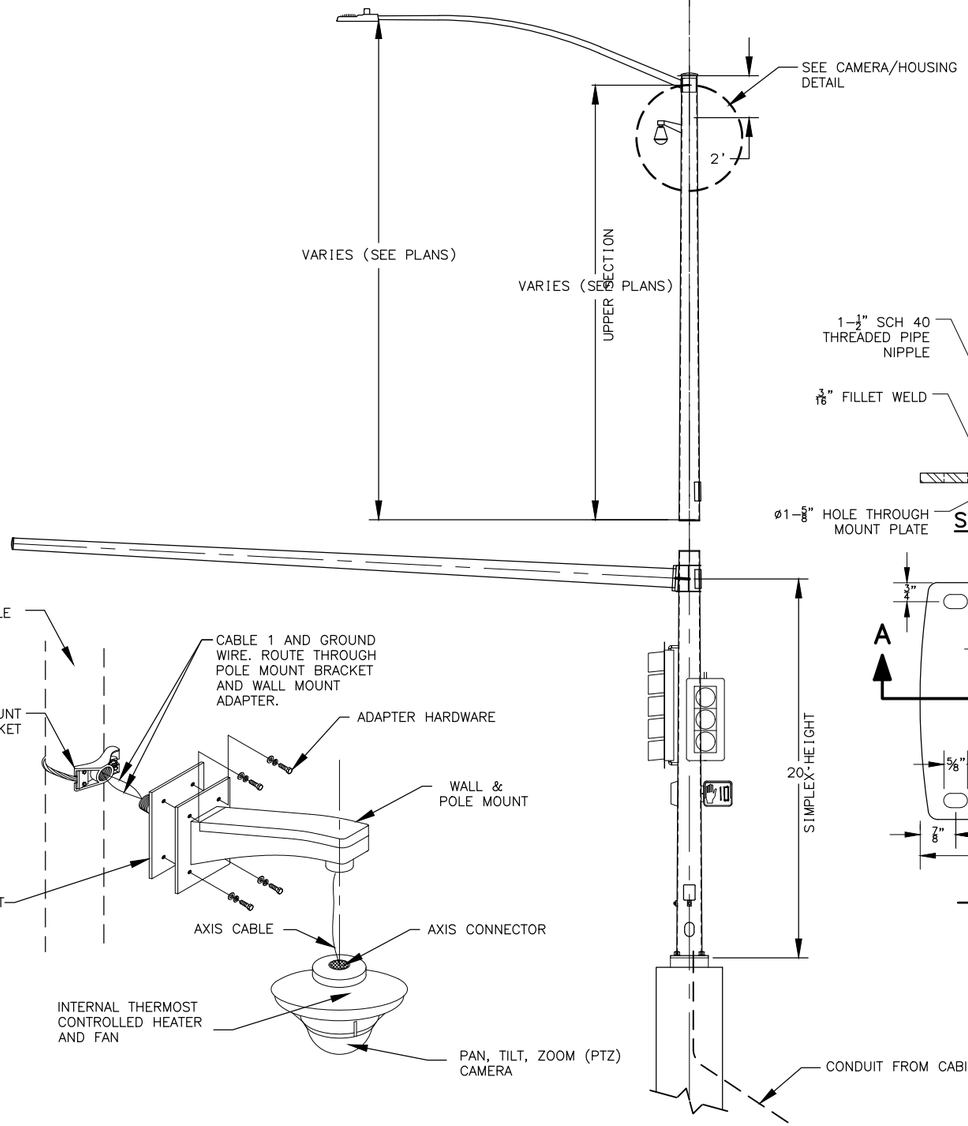

CAMERA/HOUSING DETAIL
NTS

MATERIAL REQUIREMENTS	
ALL ASSEMBLIES	
MOUNTING BRACKET	ASTRO-BRAC AB-0160-45-SS-PNC
WALL ADAPTOR	STEEL FABRICATORS OR APPROVED EQUAL
WALL MOUNT	AXIS T91L61 OR APPROVED EQUAL
CABLE 1 (SIGNAL)	CAT-5E, SHIELDED, DIRECT BURIAL
CONNECTOR	ENVIRONMENTALLY HARDENED RJ-45
STRAIN RELIEF	REMKE 2201-013 OR APPROVED EQUAL
ADAPTER HARDWARE, EACH	(1) 5/16" 18X1" HEX BOLT, STAINLESS (2) 5/16" FLAT WASHER, STAINLESS (1) 5/16" NY-LOCK NUT, STAINLESS
CAMERA	
CAMERA	SEE SPECIFICATIONS

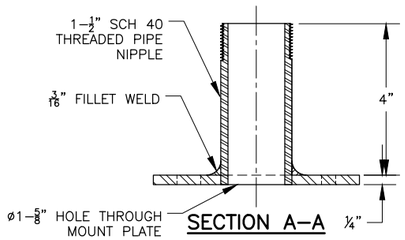

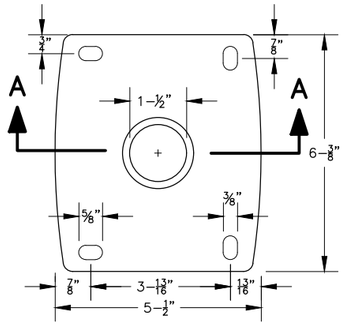

PLAN VIEW

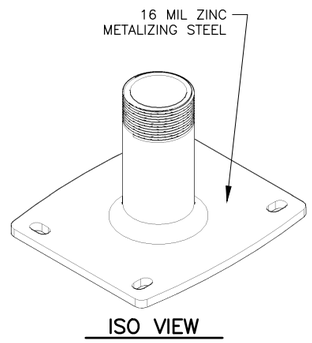

ISO VIEW

WALL MOUNT ADAPTER DETAIL

NOTES:

1. PROTECT CABLE ENDS FROM MOISTURE AT ALL TIMES.
2. PULL CABLE IN ACCORDANCE WITH SECTION 660 OF THE SPECIAL PROVISIONS. PULL CABLE SO THAT THERE IS SUFFICIENT LENGTH TO REACH THE TOP OF THE CONTROLLER CABINET. CABLES ARE TO BE PULLED WITHOUT CONNECTORS ATTACHED. WHEN CABLE HAS BEEN PULLED TO FINAL LOCATIONS INSTALL AND MAKE FINAL CONNECTIONS.
3. CABLE RUNS ARE TO BE MADE CONTINUOUS WITHOUT SPLICES EXCEPT FOR IN LOCATION SHOWN IN SPLICE DETAIL WITH SPECIFIED CONNECTOR.
4. CABLE WITH DAMAGED INSULATION, OR THAT HAS BEEN CRIMPED OR BENT BEYOND THE MINIMUM BEND RADIUS MUST BE REPLACED AT NO ADDITIONAL COST.
5. THE MINIMUM BEND RADIUS SHALL NOT EXCEED THE MANUFACTURERS RECOMMENDATIONS.
6. ENSURE ADEQUATE LENGTH OF EACH CABLE TO ALLOW WORK ON THE ENDS OF THE CABLE IN THE CONTROLLER CABINET AND THE CAMERA MOUNTING LOCATION.
7. MOUNT THE PENDENT DOME HOUSING AT A 45° ANGLE AT THE REQUIRED HEIGHT. ANGLE AND HEIGHT MAY BE ADJUSTED BY THE ENGINEER TO AVOID WELDS, APPENDICES AND TO APPROVE SIGHT DISTANCE.
8. ADJUST CAMERA INSIDE THE PENDENT DOME HOUSING AS SHOWN. ENSURE THAT THE CAMERA IS MOUNTED AT A 0° TILT ANGLE.
9. INSTALL WATERTIGHT THREADED RIGID COMPRESSION CONNECTOR WHERE CABLE PASSES THROUGH THE POLE.
10. AT SPLICE LOCATION PROVIDE A SECURE CONNECTION USING CONNECTOR PARTS SPECIFIED. AFTER CONNECTION IS MADE COVER SPLICE WITH HEAT SHRINK. PROVIDE A STRAIN RELIEF CABLE AS NECESSARY.
11. CAMERA/HOUSING MOUNTING HEIGHT TO BE DETERMINED IN THE FIELD BY THE ENGINEER.

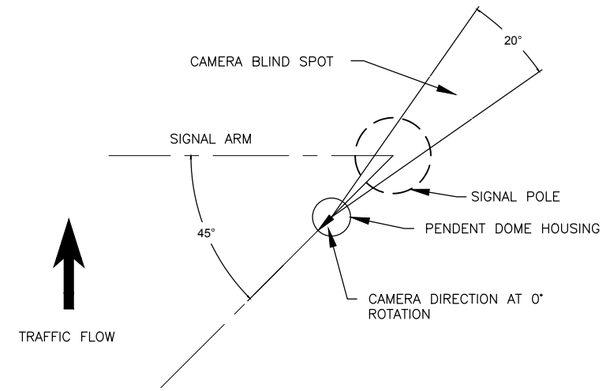

CAMERA/PENDENT DOME ORIENTATION
NTS

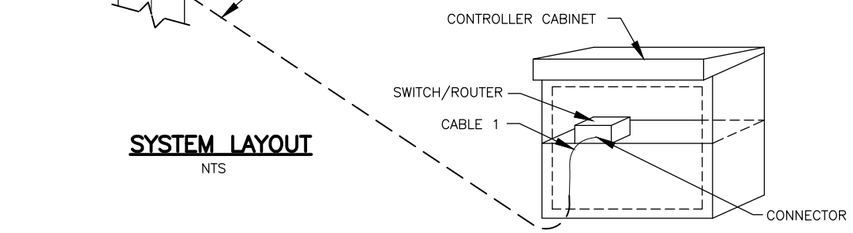

SYSTEM LAYOUT
NTS

STATE OF ALASKA
DEPARTMENT OF TRANSPORTATION
AND PUBLIC FACILITIES

HERMON RD EXTENSION AND UPGRADE, PARKS HWY TO PALMER-WASILLA HWY

CIDH FOUNDATION POLE WIRING AND GROUNDING DETAILS

STATE OF ALASKA
PS&E REVIEW
AUGUST 2026
PROFESSIONAL ENGINEER

DOWL, LLC
5015 BUSINESS PARK BLVD
SUITE 4000
ANCHORAGE, AK 99503
(907) 562-2000
#AECL848 - AK

NO.	DATE	REVISION

STATE	PROJECT DESIGNATION	YEAR	SHEET NO.	TOTAL SHEETS
ALASKA	0001729/CFHWY00799	2027	H15	H18

DESIGNED BY SRT
CHECKED BY KLK
DRAFTED BY JHK

SCALE

DATE TIME
8/7/2026 11:48 AM

DRAWING LOCATION
C:\DOWL_PW\D0433398\00799_H_DTLS.DWG

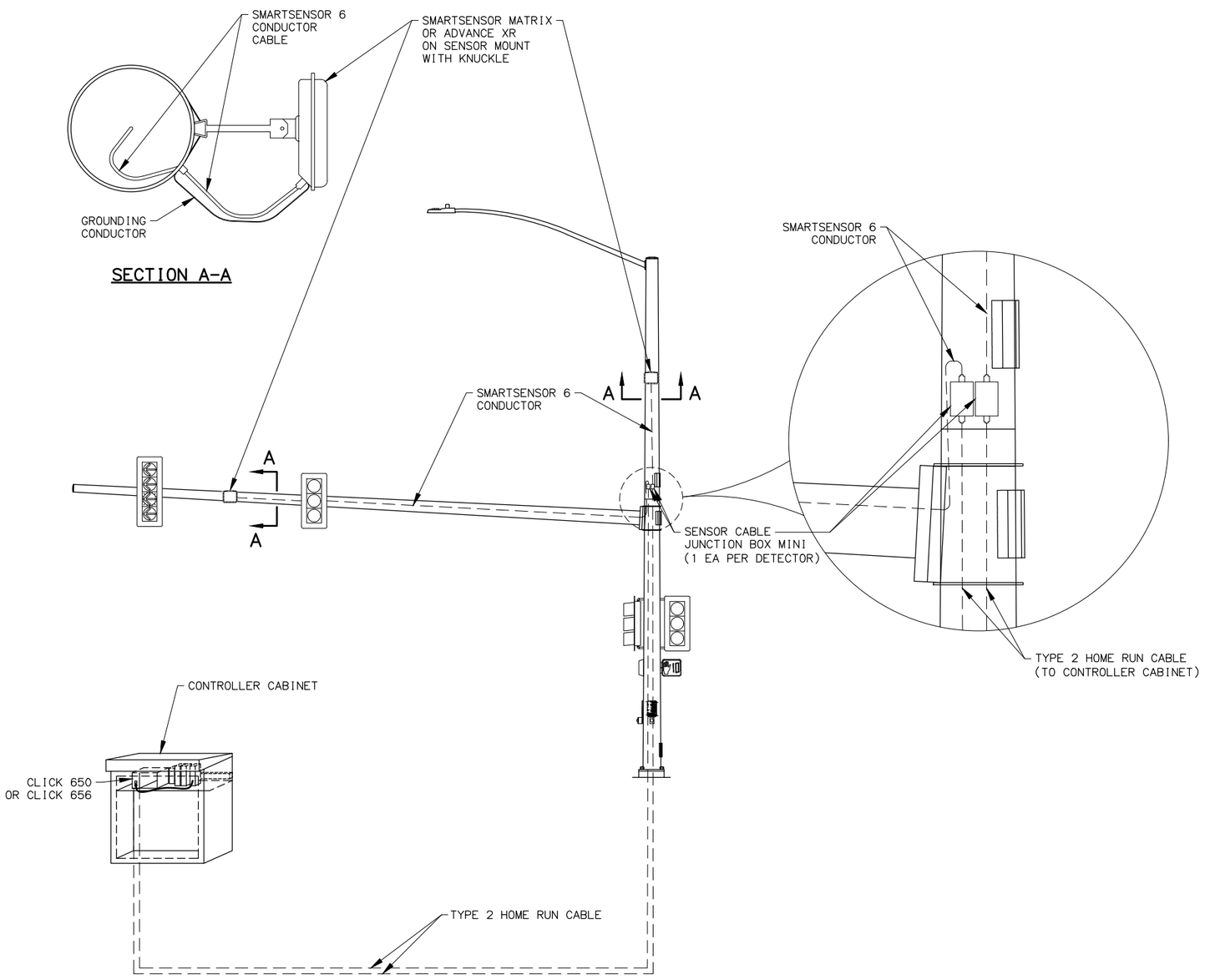

RADAR DETECTION DETAIL

(NTS)

NOTES:

1. PROTECT CABLE ENDS FROM MOISTURE AT ALL TIMES.
2. CABLE WITH DAMAGED INSULATION, OR THAT HAS BEEN CRIMPED OR BENT BEYOND THE MINIMUM BEND RADIUS MUST BE REPLACED AT CONTRACTORS EXPENSE.
3. THE MINIMUM BEND RADIUS SHALL NOT EXCEED MANUFACTURERS RECOMMENDATIONS.
4. MOUNT THE RADAR AT THE LOCATION STATED IN THE PLANS. PLACEMENT MAY BE ADJUSTED BY THE ENGINEER TO ALLOW FOR BETTER AIMING OF THE RADAR OR TO AVOID OTHER HAZARDS.
5. INSTALL WATERTIGHT THREADED RIGID COMPRESSION CONNECTOR WHERE CABLE PASSES THROUGH THE POLE.
6. FURNISH ONLY NEW EQUIPMENT OF THE BRAND AND TYPE LISTED. PROVIDE AT NO ADDITIONAL COST ALL NECESSARY DEVICES, WIRES, BRACKETS/HARDWARE ETC. TO PROVIDE A FULLY FUNCTIONING RADAR DETECTION SYSTEM.
7. INSTALL #10 AWG GROUNDING CONDUCTOR WITH GREEN COLORED INSULATION BETWEEN THE EXTERNAL GROUNDING LUG ON THE SMARTSENOR UNIT AND A 1/4" x 1/2" STAINLESS STEEL BOLT BOLTED TO THE POLE.
8. CABLE RUNS ARE TO BE MADE CONTINUOUS WITHOUT SPLICES EXCEPT WHERE NOTED IN THE JUNCTION BOX MINI.

STOP BAR DETECTOR EQUIPMENT
SMARTSENSOR MATRIX (SS-225)
MINI 710- SENSOR CABLE J-BOX MINI WITH TERMINAL BLOCKS (102-0453)
HOME RUN CABLE (MTX2 HMRN)
SMARTSENSOR 6 CONDUCTOR CABLE (SS-704-080) WITH SINGLE END CONNECTOR (SS-709) FACTORY INSTALLED
SENSOR MOUNT - 6" 3 AXIS ALUM. BRACKET. (SS-611)
ADD ON KNUCKLE (360-0129)

ADVANCE EXTENDED RANGE (XR) DETECTOR EQUIPMENT
SMARTSENSOR ADVANCE EXTENDED RANGE (SS-200E)
MINI 710- SENSOR CABLE J-BOX MINI WITH TERMINAL BLOCKS (102-0453)
HOME RUN CABLE (MTX2 HMRN)
SMARTSENSOR 6 CONDUCTOR CABLE (SS-704-XXX) WITH SINGLE END CONNECTOR (SS-709) FACTORY INSTALLED
SENSOR MOUNT - 6" 3 AXIS ALUM. BRACKET. (SS-611)
ADD ON KNUCKLE (360-0129)

STATE OF ALASKA
PS&E REVIEW
AUGUST 2026
PROFESSIONAL ENGINEER

DOWL, LLC
5015 BUSINESS PARK BLVD
SUITE 4000
ANCHORAGE, AK 99503
(907) 562-2000
#AECL848 - AK

STATE OF ALASKA
DEPARTMENT OF TRANSPORTATION
AND PUBLIC FACILITIES

HERMON RD EXTENSION AND UPGRADE, PARKS HWY TO PALMER-WASILLA HWY

PIPE PILE FOUNDATION POLE WIRING AND GROUNDING DETAILS

NO.	DATE	REVISION

STATE	PROJECT DESIGNATION	YEAR	SHEET NO.	TOTAL SHEETS
ALASKA	0001729/CFHWY00799	2027	H16	H18

DESIGNED BY SRT
CHECKED BY KLK
DRAFTED BY JHK
SCALE
DATE 8/7/2026 TIME 11:50 AM
DRAWING LOCATION C:\DOWL_PW\D0433398\00799_H_DTLS.DWG

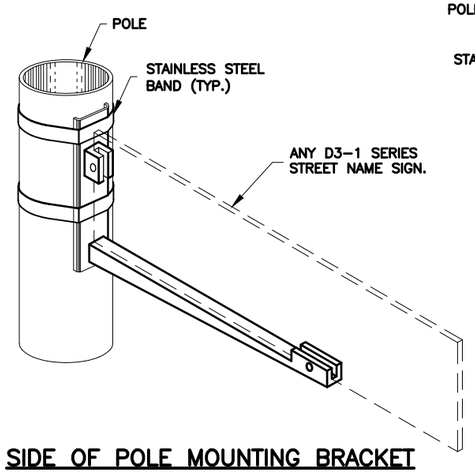

SIDE OF POLE MOUNTING BRACKET

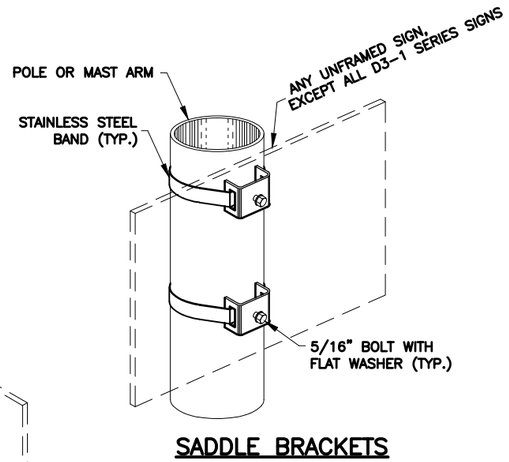

SADDLE BRACKETS

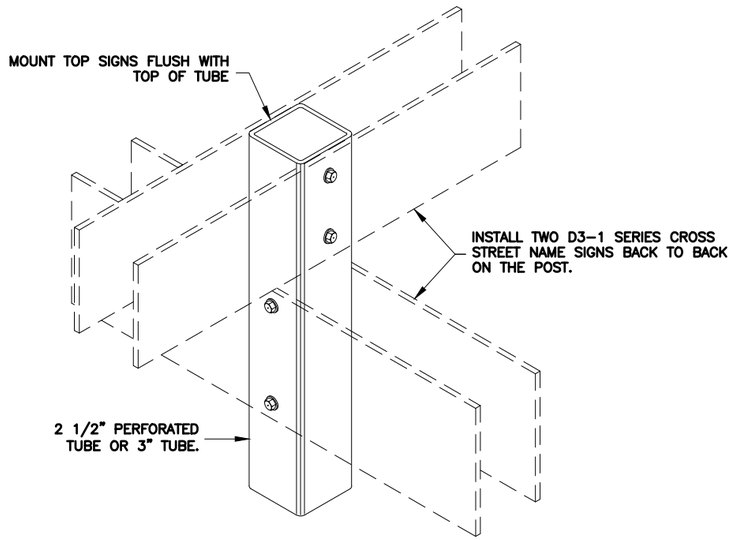

STREET NAME SIGN INSTALLATION

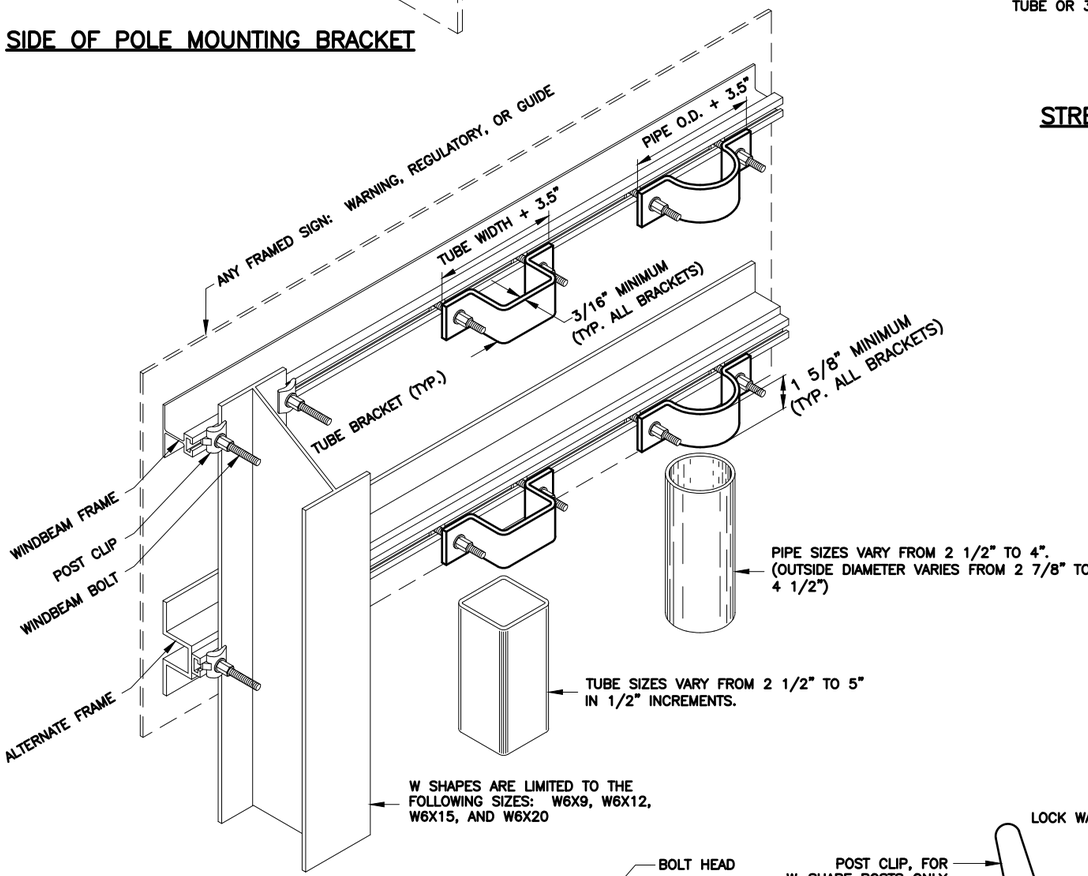

FRAMED SIGN ATTACHMENT BRACKETS

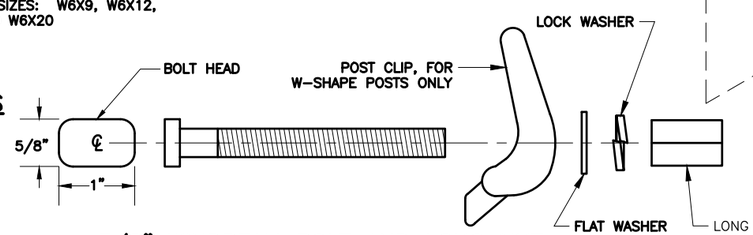

3/8" WINDBEAM BOLT AND LONG NUT

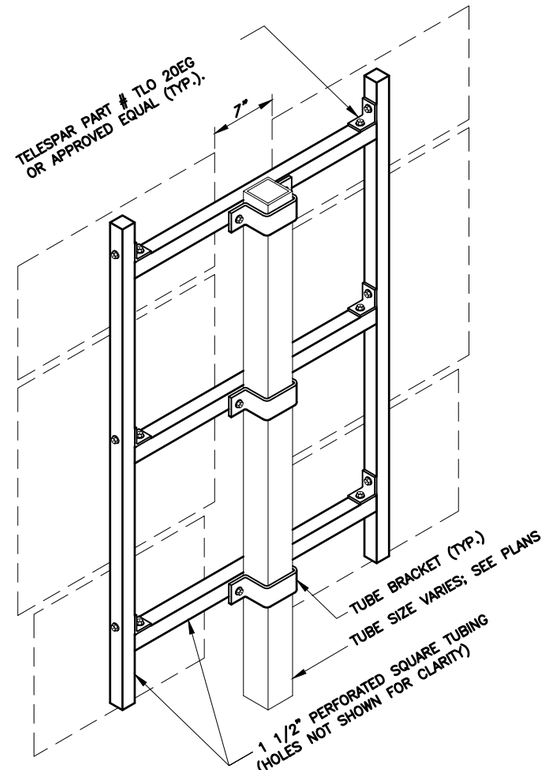

ROUTE MARKER TREE

NOTES:

1. EXCEPT FOR POLES AND MAST ARMS, ONLY USE TUBES TO SUPPORT SIGNS MOUNTED ON ONE POST.
2. ATTACH SIGNS, FRAMED AND UNFRAMED TO THEIR SUPPORTS WITH ZINC PLATED 3/8" BOLTS, EXCEPT ATTACH UNFRAMED SIGNS TO PERFORATED TUBES WITH ACCESSORY DRIVE RIVETS AND TO SADDLES WITH 5/16" BOLTS.
3. BOLT UNFRAMED SIGNS DIRECTLY TO TUBES IN TWO LOCATIONS, NEAR TOP AND NEAR BOTTOM OF MATING SURFACE. ATTACH THEM TO POLES AND MAST ARMS WITH TWO SADDLES.
4. ATTACH BRACKETS TO POLES AND MAST ARMS WITH DOUBLE WRAPS OF 3/4" WIDE BY 0.020" THICK STAINLESS STEEL BANDING MATERIAL. TIGHTEN EACH BAND UNTIL IT STOPS MOVING THROUGH THE BUCKLE.
5. ATTACH FRAMED SIGNS TO POSTS WHEREVER THE FRAMES CROSS THE POSTS. AT EACH CROSSING, ATTACH THE SIGN USING TWO POST CLIPS ON W-SHAPE POSTS, A U-SHAPED BRACKET ON PIPES, AND A BRACKET WITH SQUARE CORNERS ON TUBES.
6. THE TUBE BRACKETS USED ON EVEN INCH SIZE TUBES MAY ALSO BE USED ON TUBES 1/2" SMALLER IN SIZE.
7. ONLY USE THE SPECIAL WINDBEAM BOLTS TO ATTACH SIGNS FRAMED WITH THE WINDBEAM FRAMING MATERIAL.
8. ATTACH FRAMED SIGNS TO POLES AND MAST ARMS USING POLE PLATES INSTALLED ACCORDING TO ALASKA STANDARD PLAN S-23.
9. FOR ROUTE MARKER TREES, CUT PERFORATED TUBES TO ENSURE TIGHT FITTING JOINTS. ASSEMBLE THE PIECES WITH ACCESSORY ELL-SHAPED ANGLE BRACKETS.
10. INSTALL THE TOP EDGE OF SIGNS 1" ABOVE THE TOPS OF POSTS, EXCEPT FOR THE D3-1 STREET NAME SIGNS.
11. INSTALL THE TOP EDGE OF SIGNS 3" BELOW THE TOP OF POST, WHENEVER THEY ARE MOUNTED BELOW SIGNS SECURED BY POST TOP MOUNTING BRACKETS.
12. THE BRACKET DETAILS SHOWN INDICATE GENERAL DESIGNS ONLY. DESIGNS MAY VARY BY MANUFACTURER.
13. INSTALL WEATHER TIGHT CAPS ON ALL PIPE AND TUBE POSTS, EXCEPT PERFORATED TUBING.

FASTENER SPECIFICATION TABLE

FASTENERS	ALUMINUM	STEEL	STAINLESS STEEL
BOLTS	ASTM F468 2024-T4	ASTM A307	ASTM F593
NUTS	ASTM F467 2024-T4	ASTM A563	ASTM F594
WASHERS	ANSI B18.22.1	ASTM F844	ANSI B18.22.1
POST CLIPS	ASTM B179 356-T6	N/A	N/A

PS&E REVIEW AUGUST 2026

DOWL, LLC
5015 BUSINESS PARK BLVD
SUITE 4000
ANCHORAGE, AK 99503
(907) 562-2000
#AECL848 - AK

STATE OF ALASKA
DEPARTMENT OF TRANSPORTATION AND PUBLIC FACILITIES

HERMON RD EXTENSION AND UPGRADE, PARKS HWY TO PALMER-WASILLA HWY

EVP INSTALLATION DETAILS

NO.	DATE	REVISION

STATE	PROJECT DESIGNATION	YEAR	SHEET NO.	TOTAL SHEETS
ALASKA	0001729/CFHWY00799	2027	H17	H18

DESIGNED BY SRT
CHECKED BY KLK
DRAFTED BY JHK
SCALE
DATE 8/7/2026 TIME 11:51 AM
DRAWING LOCATION C:\DOWL_PW\D0433398\00799_H_DTLS.DWG

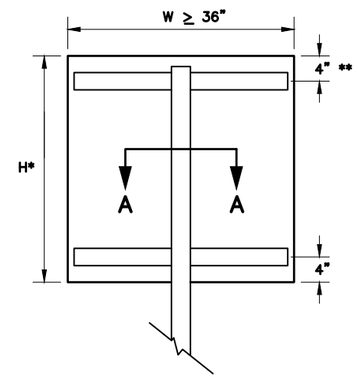

RECTANGLES AND TRAPEZOIDS

* WHEN H > 42 INCHES, INSTALL A 3RD WINDBEAM CENTERED ON THE SIGN.

** FOR S5-1 SIGNS MOUNTED ON FLASHING BEACON POSTS, USE A 10" OFFSET. OTHERWISE, USE 4".

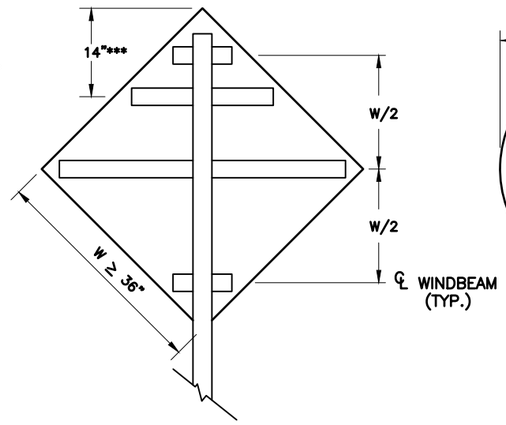

*** FOR WARNING SIGNS MOUNTED ON FLASHING BEACON POSTS, USE THE 14" OFFSET. OTHERWISE, USE W/2.

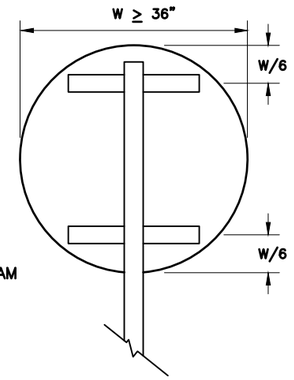

ROUNDS AND OCTAGONS

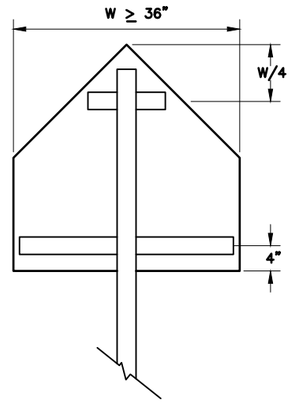

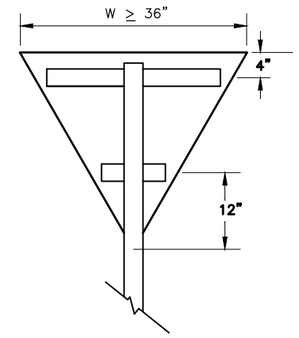

NOTES:

1. EXCEPT FOR POLES AND MAST ARMS, ONLY USE SQUARE STEEL TUBES TO SUPPORT SIGNS MOUNTED ON SINGLE POSTS.
2. INSTALL WINDBEAM OR ZEE SHAPED FRAMING MEMBERS ON DIAMOND SHAPED SIGNS 36 INCHES AND LONGER ON A SIDE AND ON OTHER SIGNS 36 INCHES WIDE AND WIDER.
3. IN HIGH WIND AREAS, THE PLANS MAY REQUIRE SIGNS SMALLER THAN THOSE LISTED IN NOTE 2 BE FRAMED AS SHOWN HERE IN.
4. THIS DRAWING DEPICTS THE WINDBEAM FRAMING AND ATTACHMENT SYSTEM. ATTACH SIGNS FRAMED WITH ZEE SHAPED FRAMING ACCORDING TO REGIONAL DRAWING "SIGN ATTACHMENT DETAILS", USING "U" SHAPED BRACKETS AND TWO BOLTS WITH NUTS.
5. THE ENGINEER MAY APPROVE OTHER FRAMING MEMBERS. SUBMIT DOCUMENTS THAT DETAIL THE FRAME'S CROSS SECTION AND STRENGTH, AND METHOD OF ATTACHING THE FRAME TO A POST.
6. USE FRAMING MEMBERS MADE FROM ALUMINUM ALLOY 6061-T6.
7. EACH FRAMING MEMBER SHALL BE ONE CONTINUOUS PIECE.
8. ATTACH FRAMING MEMBERS TO THE SIGN PANELS WITH RIVETS OR AN ENGINEER APPROVED, DOUBLE SIDED, HIGH STRENGTH, ADHESIVE TAPE.
9. WITH THE ADHESIVE TAPE, INSTALL TWO RIVETS IN BOTH ENDS OF EACH FRAMING MEMBER, AND ATTACH THE FRAMING MEMBERS TO THE SIGN PANELS ACCORDING TO THE TAPE MANUFACTURER'S WRITTEN INSTRUCTIONS, INCLUDING:
   A. THE CLEANING AND HANDLING OF THE SIGN PANELS AND FRAMING MEMBERS.
   B. THE APPLICATION OF THE ADHESIVE TAPE.
10. WHEN RIVETS ARE USED TO ATTACH FRAMING MEMBERS, INSTALL 2 RIVETS IN EACH END AND THE BALANCE ON 8" MAXIMUM CENTERS.
11. USE 3/16" DIAMETER RIVETS CONFORMING TO ALUMINUM ALLOY 6061-T6 FOR COLD DRIVEN RIVETS, OR ALUMINUM ALLOY 6061-T43 FOR HOT DRIVEN RIVETS.
12. THE BRACKETS USED ON EVEN INCH SIZE TUBES MAY ALSO BE USED ON TUBES 1/2" SMALLER IN SIZE.

WINDBEAM LOCATIONS FOR EACH SIGN SHAPE

ELEVATION VIEW

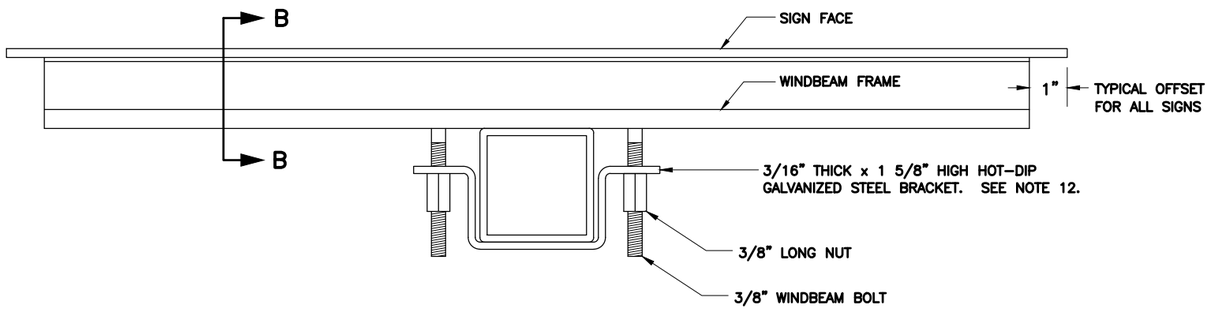

SECTION A - A TYPICAL SIGN ATTACHMENT DETAILS AT EACH WINDBEAM

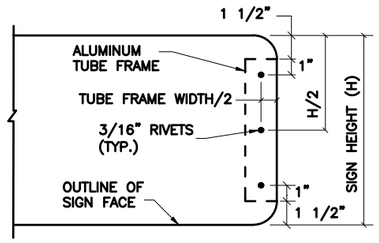

VIEW C - C

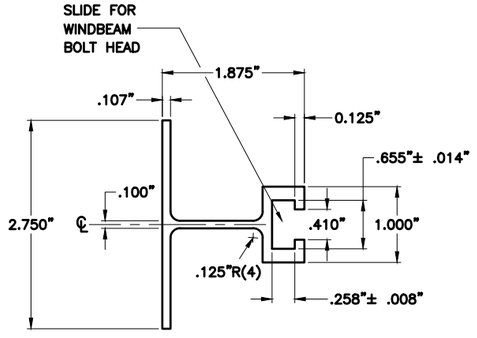

SECTION B - B WINDBEAM CROSS SECTION

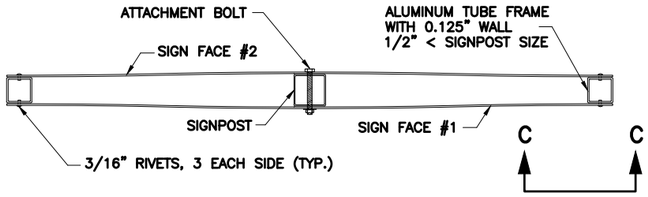

D3-1 STREET NAME SIGN FRAMING DETAIL

PLAN VIEW

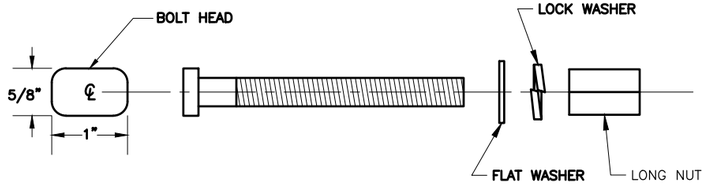

3/8" WINDBEAM BOLT AND LONG NUT

DOWL, LLC
5015 BUSINESS PARK BLVD
SUITE 4000
ANCHORAGE, AK 99503
(907) 562-2000
#AECL848 - AK

PS&E REVIEW AUGUST 2026

STATE OF ALASKA
DEPARTMENT OF TRANSPORTATION AND PUBLIC FACILITIES

HERMON RD EXTENSION AND UPGRADE, PARKS HWY TO PALMER-WASILLA HWY

PAN, TILT, ZOOM, CAMERA MOUNTING DETAILS

NO.	DATE	REVISION

STATE	PROJECT DESIGNATION	YEAR	SHEET NO.	TOTAL SHEETS
ALASKA	0001729/CFHWY00799	2027	H18	H18

DESIGNED BY SRT
CHECKED BY KLK
DRAFTED BY JHK
SCALE
DATE TIME 8/7/2026 11:17 AM

DRAWING LOCATION
C:_DOWL_PW\D0433398\00799_H_DTLS.DWG

NOTES:

1. PATCH PANEL TO BE LOCATED ON THE CONTROLLER CABINET SHELF ADJACENT TO THE ETHERNET SWITCH AND THE TRAFFIC CONTROLLER UNIT. PROVIDE SUFFICIENT SLACK PATCH CABLE IN CABINET TO ALLOW FOR RELOCATION ANYWHERE IN THE CABINET.
2. NO SPLICES ARE PERMITTED EXCEPT WHERE SPECIFICALLY INDICATED IN THE PLANS. SPLICE CLOSURES MUST CONFORM TO SECTION 662-3.10 OF THE SPECIFICATIONS.
3. FIBER OPTIC VAULTS SHALL NOT INCLUDE ELECTRICAL CONDUIT OR CONDUCTORS.

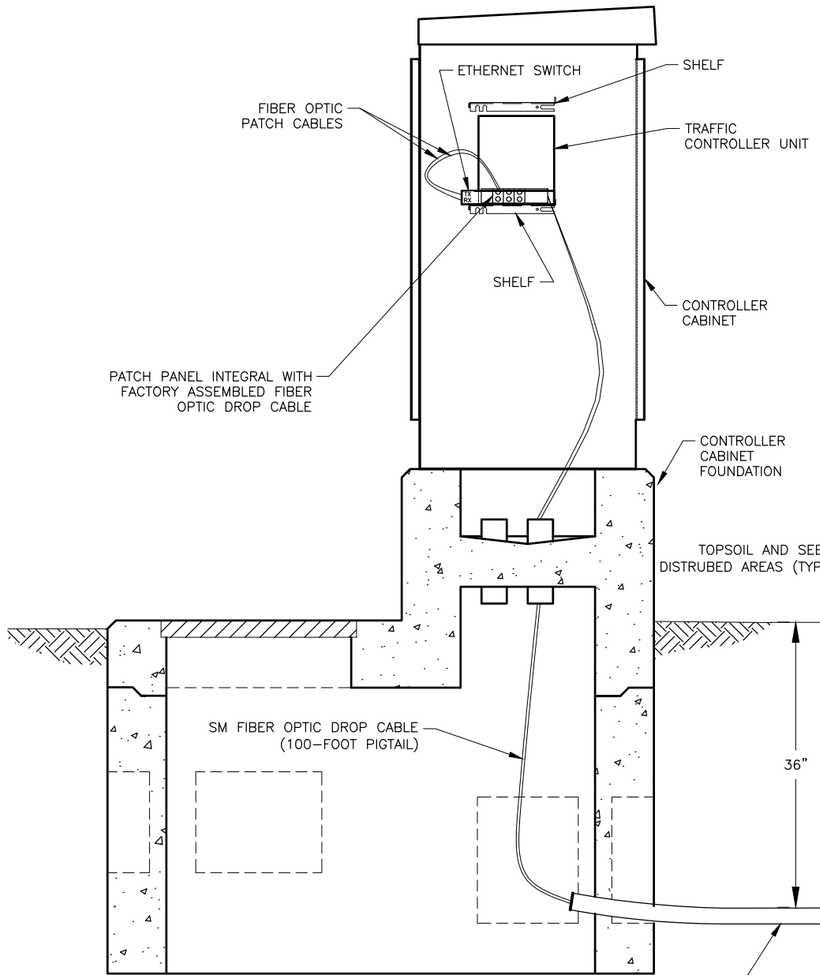

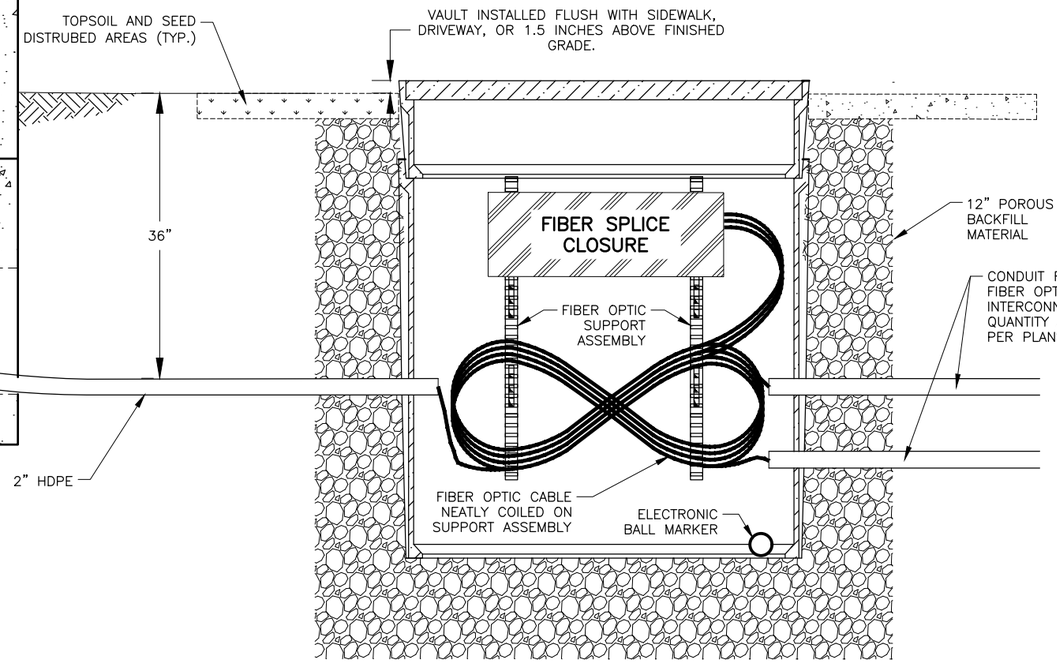

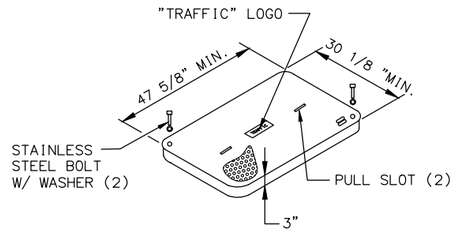

COVER

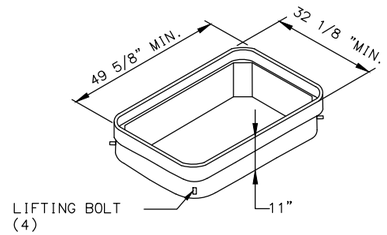

TOP EXTENSION

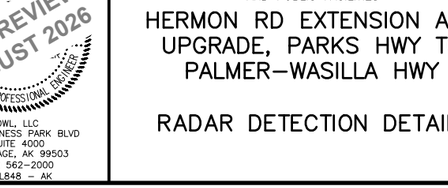

PG TYPE JUNCTION BOX - BOTTOM

PS&E REVIEW AUGUST 2026

DOWL, LLC
5015 BUSINESS PARK BLVD
SUITE 4000
ANCHORAGE, AK 99503
(907) 562-2000
#AECL848 - AK

STATE OF ALASKA
DEPARTMENT OF TRANSPORTATION
AND PUBLIC FACILITIES

HERMON RD EXTENSION AND UPGRADE, PARKS HWY TO PALMER-WASILLA HWY

RADAR DETECTION DETAILS

NO.	DATE	REVISION

STATE	PROJECT DESIGNATION	YEAR	SHEET NO.	TOTAL SHEETS
ALASKA	0001729/CFHWY00799	2027	HA1	HA6

DESIGNED BY SRT
CHECKED BY KLK
DRAFTED BY JHK

SCALE

DATE TIME
8/7/2026 11:17 AM

DRAWING LOCATION
C:\DOWL_PW\0043398\00799-SL-SIGNAL.DWG

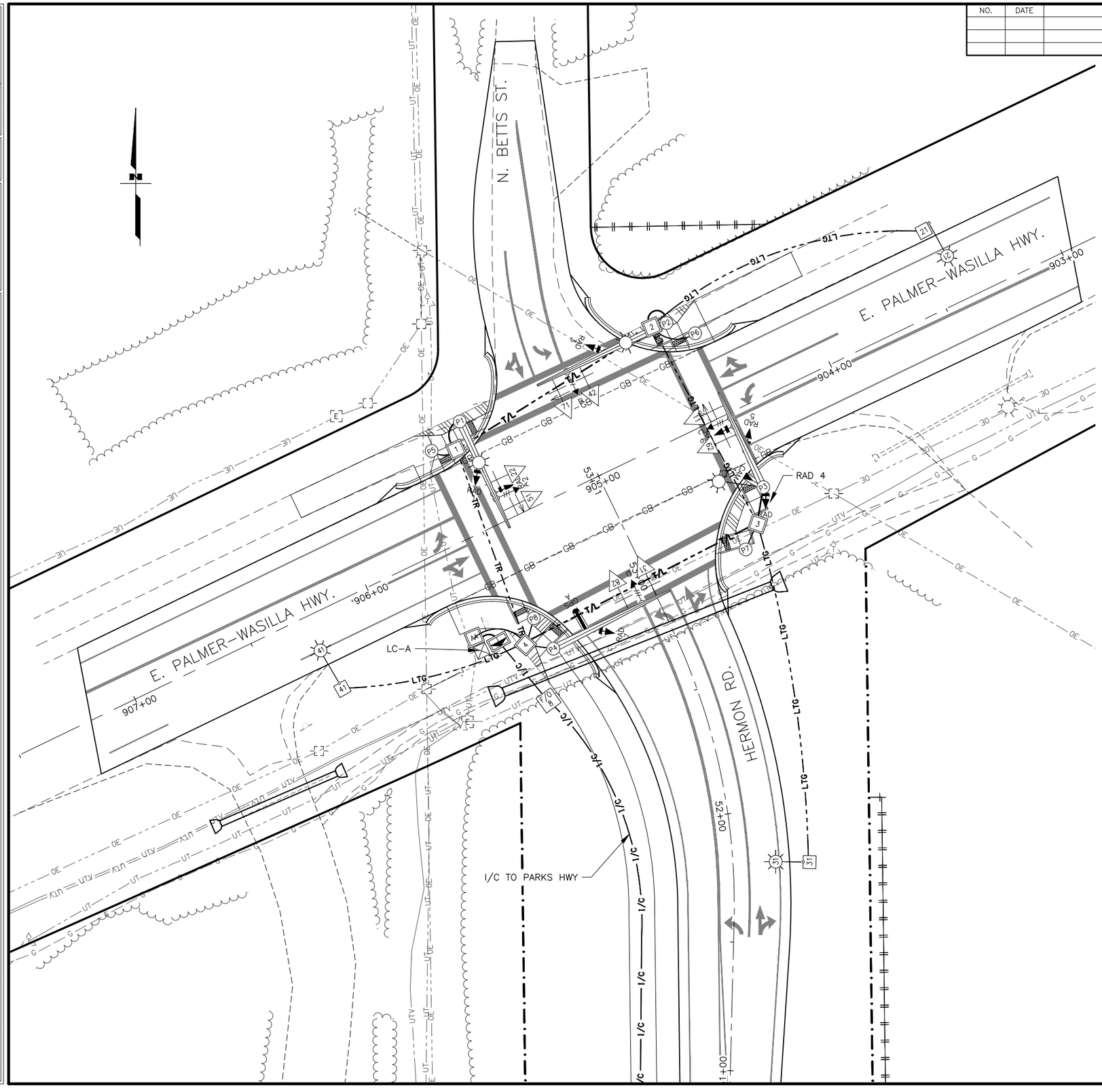

FOUNDATION SCHEDULE

ITEM	STATION ALIGNMENT	OFFSET	TYPE	REMARKS
LC-A	"PW" 905+70.5	41.5 LT	1A	
TC	"PW" 905+63.0	41.1 LT	VAULT	NEW TRAFFIC CONTROLLER
P1	"PW" 905+39.4	42.5 RT	STEEL PILE	SIGNAL POLE
P2	"PW" 904+50.5	42.3 RT	STEEL PILE	SIGNAL POLE
P3	"PW" 904+44.2	31.7 LT	STEEL PILE	SIGNAL POLE
P4	"PW" 905+45.0	52.9 LT	STEEL PILE	SIGNAL POLE
P5	"PW" 905+54.3	37.1 RT	STEEL PILE	PEDESTRIAN POLE
P6	"PW" 904+42.1	33.7 RT	STEEL PILE	PEDESTRIAN POLE
P7	"PW" 904+60.9	50.5 LT	STEEL PILE	PEDESTRIAN POLE
P8	"PW" 905+46.7	38.9 LT	STEEL PILE	PEDESTRIAN POLE

JUNCTION BOX SCHEDULE

J-BOX	STATION ALIGNMENT	OFFSET	TYPE	REMARKS
AA	"PW" 905+70.9	35.8 LT	2	LOAD CENTER
1	"PW" 905+45.4	33.5 RT	2	TRAFFIC
2	"PW" 904+56.0	43.5 RT	2	TRAFFIC
3	"PW" 905+52.4	43.8 LT	2	TRAFFIC
4	"PW" 905+54.1	46.5 LT	2	TRAFFIC
21	"PW" 903+41.5	32.9 RT	1A	LIGHTING
31	"HR" 51+79.4	29.8 RT	1A	LIGHTING
41	"PW" 906+25.8	31.0 LT	1A	LIGHTING

NOTES:

1. SEE SIGNING, STRIPING, ILLUMINATION, AND INTERCONNECT SHEETS AND SCHEDULES FOR ADDITIONAL LIGHTING AND INTERCONNECT INFORMATION.

STATE OF ALASKA
PROFESSIONAL ENGINEER
PS&E REVIEW
AUGUST 2026

DOWL, LLC
5015 BUSINESS PARK BLVD
SUITE 4000
ANCHORAGE, AK 99503
(907) 562-2000
#AECL848 - AK

STATE OF ALASKA
DEPARTMENT OF TRANSPORTATION
AND PUBLIC FACILITIES

HERMON RD EXTENSION AND UPGRADE, PARKS HWY TO PALMER-WASILLA HWY

PALMER-WASILLA HIGHWAY & HERMON ROAD: SIGNAL PLAN

NO.	DATE	REVISION

STATE	PROJECT DESIGNATION	YEAR	SHEET NO.	TOTAL SHEETS
ALASKA	0001729/CFHWY00799	2027	HA2	HA6

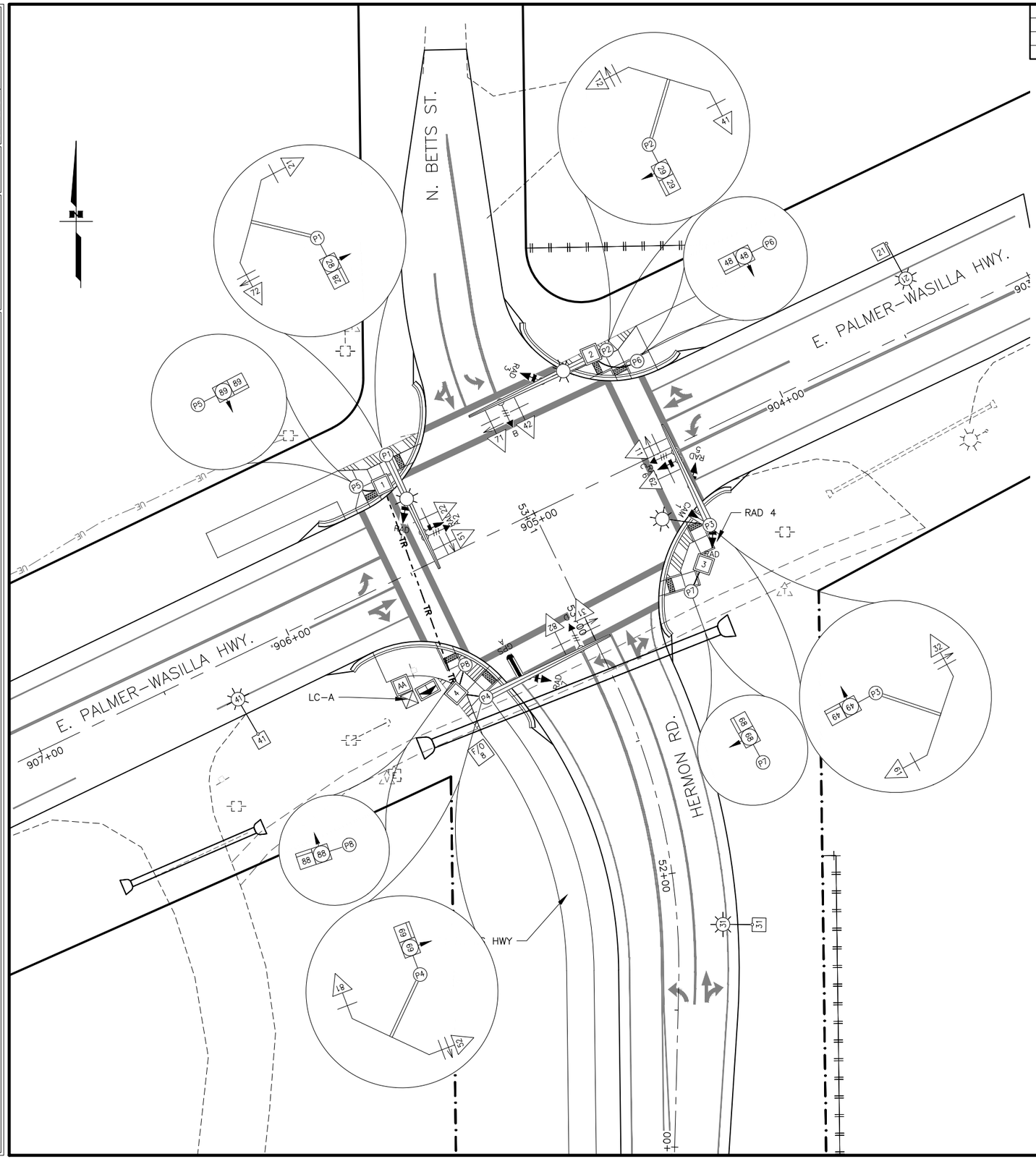

PREEMPTION DWELL PHASE VEHICLE MOVEMENTS

CHANNEL A: PHASES 2 + 5
CHANNEL B: PHASES 4 + 7
CHANNEL C: PHASES 1 + 6
CHANNEL D: Phases 3 + 8

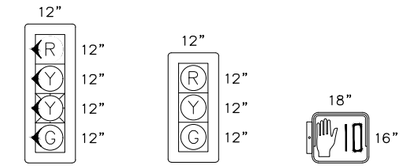

SIGNAL HEAD CONFIGURATIONS

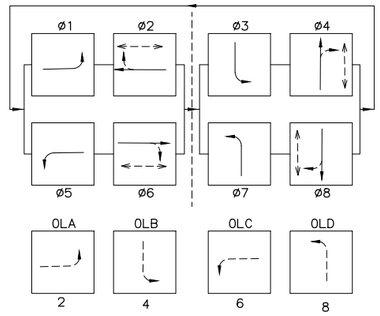

PHASING SEQUENCE DIAGRAM

RADAR DETECTION SCHEDULE

LOCATION	ID	PHASE DET.	FACING DIRECTION	REMARKS
P1 MASTARM	1	1, 6	SW	MATRIX
P1 MASTARM	2	2	E	ADVANCE
P2 MASTARM	3	3, 8	NW	MATRIX
P3 SIDE OF POLE	4	4	S	ADVANCE
P3 MASTARM	5	2, 5	NE	MATRIX
P3 MASTARM	6	6	W	ADVANCE
P4 MASTARM	7	4, 7	SE	MATRIX
P4 MASTARM	8	8	N	ADVANCE

OPTICOM DETECTOR SCHEDULE

LOCATION	DETECTOR ID	PHASE CALL	FACING DIRECTION	MODEL	REMARKS
P1 MASTARM	A	2, 5	E	721	
P2 MASTARM	B	4, 7	S	721	
P3 MASTARM	GPS A	ALL			FOR FUTURE USE
P3 MASTARM	C	1, 6	W	721	
P4 MASTARM	D	3, 8	N	721	

STATE OF ALASKA
PS&E REVIEW
AUGUST 2026
PROFESSIONAL ENGINEER

DOWL, LLC
5015 BUSINESS PARK BLVD
SUITE 4000
ANCHORAGE, AK 99503
(907) 562-2000
#AECL848 - AK

STATE OF ALASKA
DEPARTMENT OF TRANSPORTATION
AND PUBLIC FACILITIES

HERMON RD EXTENSION AND UPGRADE, PARKS HWY TO PALMER-WASILLA HWY

PALMER-WASILLA HIGHWAY & HERMON ROAD: SIGNAL OPERATION PLAN

DESIGNED BY: SRT
CHECKED BY: KLK
DRAFTED BY: JHK
SCALE:
DATE TIME: 8/7/2026 11:17 AM
DRAWING LOCATION: C:\DOWL_PW\00433398\00799-SL-SIGNAL.DWG

NO.	DATE	REVISION

STATE	PROJECT DESIGNATION	YEAR	SHEET NO.	TOTAL SHEETS
ALASKA	0001729/CFHWY00799	2027	HA3	HA6

DESIGNED BY SRT
CHECKED BY KLK
DRAFTED BY JHK
SCALE
DATE TIME 8/7/2026 11:17 AM
DRAWING LOCATION C:\DOWL_PW\D0433398\00799-SL-SIGNAL.DWG

CABLE SCHEDULE

CABLE	CONDUCTOR	J-BOX PATH	LOAD
1	3C6	AA-TC	TRAFFIC CONTROLLER
2	3C8	AA-4-3-P3-3-2-P2-2-1-P1	LUMINAIRES POLES 1, 2, 3
3	3C8	AA-4-41-L41-41-4-3-31-L31-31-3-2-21-L21	LIMINAIRES POLES 21, 31, 41
4	7C14	TC-4-1-P1	SIGNAL HEAD 21
5	7C14	TC-4-1-P1	SIGNAL HEAD 22
6	7C14	TC-4-1-P1	SIGNAL HEAD 51
7	7C14	TC-4-1-P1	SIGNAL HEAD 72
8	4C14	TC-4-1-P1	PEDESTRIAN HEAD 28
9	4C14	TC-4-1-P5	PEDESTRIAN HEAD 89
10	3C14	TC-4-1-P1	PEDESTRIAN BUTTON 28
11	3C14	TC-4-1-P5	PEDESTRIAN BUTTON 89
12	3C14	TC-4-1-P1	CONFIRMATION LIGHT A
13	3C20	TC-4-1-P1	EVP A
14	6C20/22	TC-4-1-P1	RADAR 1
15	6C20/22	TC-4-1-P1	RADAR 2
16	7C14	TC-4-1-2-P2	SIGNAL HEAD 12
17	7C14	TC-4-1-2-P2	SIGNAL HEAD 41
18	7C14	TC-4-1-2-P2	SIGNAL HEAD 42
19	7C14	TC-4-1-2-P2	SIGNAL HEAD 71
20	4C14	TC-4-1-2-P2	PEDESTRIAN HEAD 29
21	4C14	TC-4-1-2-P6	PEDESTRIAN HEAD 48
22	3C14	TC-4-1-2-P2	PEDESTRIAN BUTTON 29
23	3C14	TC-4-1-2-P6	PEDESTRIAN BUTTON 48
24	3C14	TC-4-1-2-P2	CONFIRMATION LIGHT B
25	3C20	TC-4-1-2-P2	EVP B
26	6C20/22	TC-4-1-2-P2	RADAR 3
28	7C14	TC-4-3-P3	SIGNAL HEAD 11
29	7C14	TC-4-3-P3	SIGNAL HEAD 32
30	7C14	TC-4-3-P3	SIGNAL HEAD 61
31	7C14	TC-4-3-P3	SIGNAL HEAD 62
32	4C14	TC-4-3-P3	PEDESTRIAN HEAD 49
33	4C14	TC-4-3-P7	PEDESTRIAN HEAD 68
34	3C14	TC-4-3-P3	PEDESTRIAN BUTTON 49
35	3C14	TC-4-3-P7	PEDESTRIAN BUTTON 68
36	3C14	TC-4-3-P3	CONFIRMATION LIGHT C
37	3C20	TC-4-3-P3	EVP C
38	6C20/22	TC-4-3-P3	RADAR 4
39	6C20/22	TC-4-3-P3	RADAR 5
40	6C20/22	TC-4-3-P3	RADAR 6
41	1-CAT5	TC-4-3-P3	PTZ
42	7C14	TC-4-P4	SIGNAL HEAD 31
43	7C14	TC-4-P4	SIGNAL HEAD 52
44	7C14	TC-4-P4	SIGNAL HEAD 81
45	7C14	TC-4-P4	SIGNAL HEAD 82
46	4C14	TC-4-P4	PEDESTRIAN HEAD 69
47	4C14	TC-4-P8	PEDESTRIAN HEAD 88
48	3C14	TC-4-P4	PEDESTRIAN BUTTON 69
49	3C14	TC-4-P8	PEDESTRIAN BUTTON 88
50	3C14	TC-4-P4	CONFIRMATION LIGHT D
51	3C20	TC-4-P4	EVP D
52	6C20/22	TC-4-P4	RADAR 7
53	1070	TC-4-P4	GPS

CONDUIT SCHEDULE

RUN #	CONDUIT		CABLES	DESTINATION	CONDUIT FILL
AA-TC	2	RMC	1	TRAFFIC CONTROLLER	13%
AA-4	2	RMC	2, 3	INTX & HWY LIGHTING	26%
TC-4	3	RMC	4, 5, 6, 7, 8, 9, 12, 16, 17, 18, 19, 20, 21, 24	POLES 1, 2, 5, 6	28%
	3	RMC	28, 29, 30, 31, 32, 33, 36, 42, 43, 44, 45, 46, 47, 50	POLES 3, 4, 7, 8	28%
	3	RMC	10, 11, 13, 14, 15, 22, 23, 25, 26	POLES 1, 2, 5, 6	12%
	3	RMC	34, 35, 37, 38, 39, 40, 41, 48, 49, 51, 52, 53	POLES 3, 4, 7, 8	15%
	3	RMC	SPARE		
1-P1	3	RMC	4, 5, 6, 7, 8, 10, 12, 13, 14, 15	POLE 1	20%
	2	RMC	2	INTX LIGHTING	13%
	2	RMC	SPARE	POLE 1	
1-P5	2	RMC	9, 11	POLE 5	7%
1-2	3	RMC	16, 17, 18, 19, 20, 21, 22, 23, 24, 25, 26	POLES 2, 6	24%
	2	RMC	2	INTX LIGHTING	13%
	3	RMC	SPARE		
1-4	3	RMC	4, 5, 6, 7, 8, 9, 12, 16, 17, 18, 19, 20, 21, 24	POLES 1, 2, 5, 6	28%
	3	RMC	10, 11, 13, 14, 15, 22, 23, 25, 26	POLES 1, 2, 5, 6	17%
	3	RMC	SPARE		
2-P2	3	RMC	16, 17, 18, 19, 20, 22, 24, 25, 26	POLE 2	17%
	2	RMC	2 (IN/OUT)	INTX LIGHTING	26%
	2	RMC	SPARE	POLE 2	
2-P6	2	RMC	21, 23	POLE 6	7%
2-3	2	RMC	2,3	INTX & HWY LIGHTING	26%
	3	RMC	SPARE		
2-21	2	RMC	3	HWY LIGHTING	13%
3-P3	3	RMC	28, 29, 30, 31, 32, 34, 36, 37, 38, 39, 40, 41	POLE 3	20%
	2	RMC	2 (IN/OUT)	INTX LIGHTING	26%
	2	RMC	SPARE	POLE 3	
3-P7	2	RMC	33, 35	POLE 7	7%
3-4	3	RMC	28, 29, 30, 31, 32, 33, 34, 35, 36, 37, 38, 39, 40, 41	POLES 3, 7	28%
	2	RMC	2,3	INTX & HWY LIGHTING	26%
	3	RMC	SPARE		
3-31	2	RMC	3 (IN/OUT)	HWY LIGHTING	26%
4-P4	3	RMC	42, 43, 44, 45, 46, 48, 50, 51, 52, 53	POLE 4	18%
	2	RMC	SPARE	POLE 4	
4-P8	2	RMC	47, 49	POLE 8	7%
4-41	2	RMC	3 (IN/OUT)	HWY LIGHTING	26%

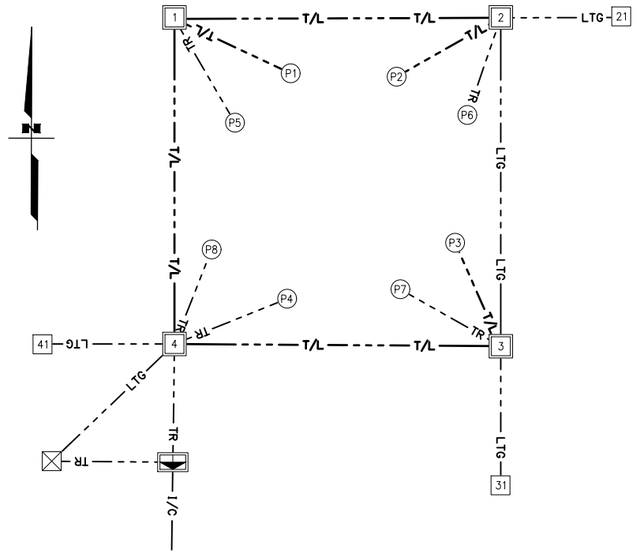

PS&E REVIEW AUGUST 2026

DOWL, LLC
5015 BUSINESS PARK BLVD
SUITE 4000
ANCHORAGE, AK 99503
(907) 562-2000
#AECL848 - AK

STATE OF ALASKA
DEPARTMENT OF TRANSPORTATION
AND PUBLIC FACILITIES

HERMON RD EXTENSION AND UPGRADE, PARKS HWY TO PALMER-WASILLA HWY

PALMER-WASILLA HIGHWAY & HERMON ROAD: CABLE SCHEDULE

NO.	DATE	REVISION

STATE	PROJECT DESIGNATION	YEAR	SHEET NO.	TOTAL SHEETS
ALASKA	0001729/CFHWY00799	2027	HA4	HA6

DESIGNED BY	SRT
CHECKED BY	KLK
DRAFTED BY	JHK

SCALE

DATE TIME 8/7/2026 11:17 AM

DRAWING LOCATION
C:\DOWL_PW\0043398\00799-SL-SIGNAL.DWG

SUMMARY OF NEW LOAD CENTER 'A'

LOAD CENTER TYPE:	TYPE 1A
MAINTAINED BY:	STATE OF ALASKA
SERVING UTILITY:	MATANUSKA ELECTRIC ASSOCIATION
SERVICE CONDUIT TYPE:	RIGID METAL CONDUIT
LOCATION DATA	
LOAD CENTER:	SE CORNER PWH AT HERMON RD
POWER SOURCE:	NEW LINE EXTENSION
PHOTOELECTRIC CONTROL:	AT LOAD CENTER
SERVICE VOLTAGE:	120/240V, 1-PHASE
PROVIDE METER SOCKET:	NEW
MAIN BREAKER A:	240V, 100A, 2-POLE
CONTACTOR 1:	600V, 12-POLE, 30A
AIC RATING:	10,000A

PANEL A

CKT	AMP TRIP	DESCRIPTION	CKT KVA	AØ	BØ	CKT KVA	DESCRIPTION	AMP TRIP	CKT
1	15/2	PHOTOCELL	0.1	3.9		3.8	TC	40/1	2
3			0.1		0.1	0.0			4
5	20/2	*INTERSECTION-EAST LTG 1,2,3	0.2	0.4		0.2	*INTERSECTION-WEST LTG 21,31,41	20/2	6
7			0.2		0.4	0.2			8
9			0.0	0.0		0.0			10
11			0.0		0.0	0.0			12
13			0.0	0.0		0.0			14
15			0.0		0.0	0.0			16
17			0.0	0.0		0.0			18
* = THROUGH CONTACTOR				4.3	0.5	TOTAL KVA			4.8
				AMPS					20.0

SHORT CIRCUIT CALCULATION - LC 'A'

TRANSFORMER RATING	25KVA
VOLTAGE	120/240V
TRANSFORMER IMPEDANCE	1.2%
AVAILABLE SHORT CIRCUIT CURRENT AT TRANSFORMER SECONDARY	8,680A
SERVICE CONDUCTOR LENGTH	40'
SERVICE CONDUCTOR SIZE	2 AWG ALUM
CONDUIT	PVC
MAXIMUM FAULT CURRENT	5,214A
DATE CALCULATED	1/29/2025

ARC FLASH CALCULATION - LC 'A'

INCIDENT ENERGY	11.1 cal/cm²
ARC-FLASH BOUNDARY	73"
WORKING DISTANCE	18"
INSULATING GLOVES CLASS	00
NOMINAL SYSTEM VOLTAGE	240V
LIMITED APPROACH BOUNDARY	42"
RESTRICTED APPROACH BOUNDARY	12"
CALCULATION DATE	12/15/2025

STATE OF ALASKA
PS&E REVIEW
AUGUST 2026
PROFESSIONAL ENGINEER

DOWL, LLC
5015 BUSINESS PARK BLVD
SUITE 4000
ANCHORAGE, AK 99503
(907) 562-2000
#AECL848 - AK

STATE OF ALASKA
DEPARTMENT OF TRANSPORTATION
AND PUBLIC FACILITIES

HERMON RD EXTENSION AND UPGRADE, PARKS HWY TO PALMER-WASILLA HWY

PALMER-WASILLA HIGHWAY & HERMON ROAD: LOAD CENTER SUMMARY

NO.	DATE	REVISION

STATE	PROJECT DESIGNATION	YEAR	SHEET NO.	TOTAL SHEETS
ALASKA	0001729/CFHWY00799	2027	HA5	HA6

DESIGNED BY SRT
CHECKED BY KLK
DRAFTED BY JHK

SCALE

DATE TIME
8/7/2026 11:17 AM

DRAWING LOCATION
C:\DOWL_PW\D0433398\00799-SL-SIGNAL.DWG

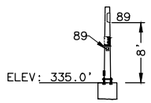

SIGNAL POLE 5
LOOKING WEST

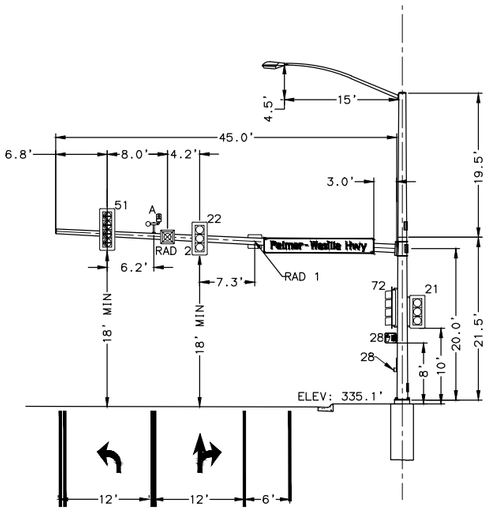

SIGNAL POLE 1
LOOKING WEST

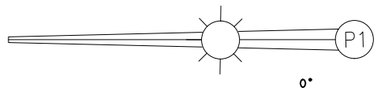

RADIAL INDEX

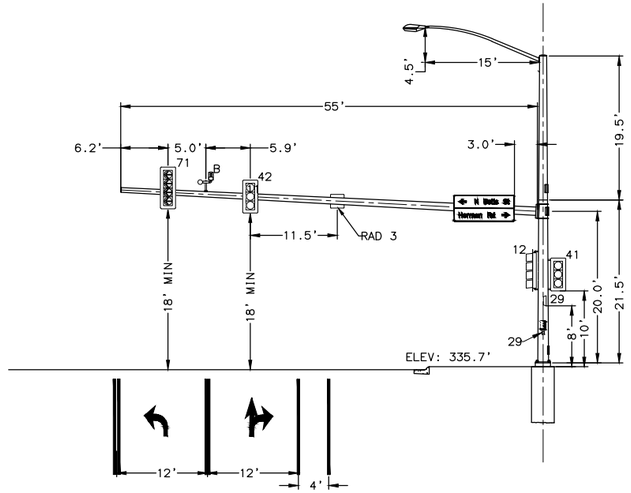

SIGNAL POLE 2
LOOKING NORTH

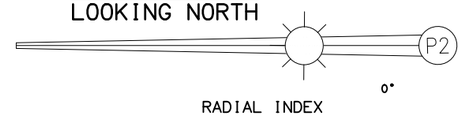

RADIAL INDEX

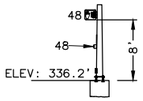

SIGNAL POLE 6
LOOKING NORTH

NOTES:

1. TOP OF FOUNDATION SHALL BE WITHIN +4" OF TOP BACK OF SIDEWALK. FOUNDATION ELEVATIONS SHALL BE APPROVED BY ENGINEER PRIOR TO INSTALLATION AND ADJUSTED AS NEEDED.
2. INSTALL FULLY FUNCTIONING GPS OPTICOM SYSTEM AS SHOWN. MASTARM MOUNTED GPS RECIEVER SHALL BE INSTALLED WITH AT LEAST 3 FEET SEPARATION FROM OTHER ITEMS ON THE MASTARM OR AS DIRECTED BY THE ENGINEER.
3. RADAR LOCATIONS SHALL BE CONFIRMED WITH THE MANUFACTURER PRIOR TO WIRE ROUTING, ADJUSTMENTS MAY BE NECESSARY.
4. SYMBOL MARKINGS ARE FOR LANE ARRANGEMENT REFERENVE ONLY. SEE SIGNING STRIPING, ILLUMINATION, AND INTERCONNECT SHEETS FOR DETAILS.
5. THE FACE OF NEW PEDESTRIAN BUTTONS SHALL BE PARALLEL TO THE ASSOCIATED CROSSWALK AND BUTTON HEIGHT SHALL BE BETWEEN 34 AND 40 INCHES ABOVE THE CLEAR SPACE.

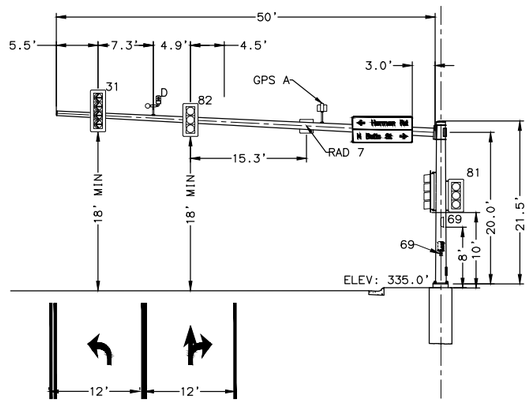

SIGNAL POLE 4
LOOKING SOUTH

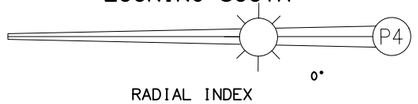

RADIAL INDEX

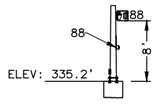

SIGNAL POLE 8
LOOKING SOUTH

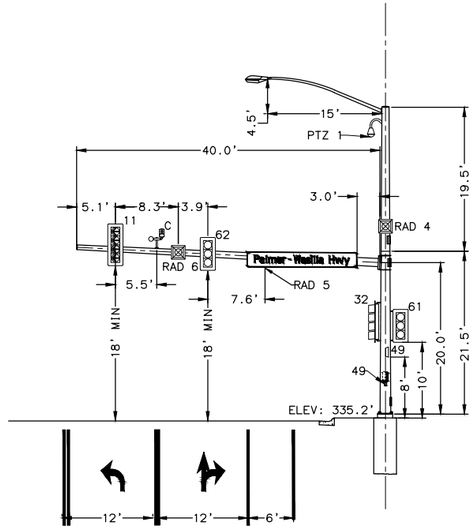

SIGNAL POLE 3
LOOKING EAST

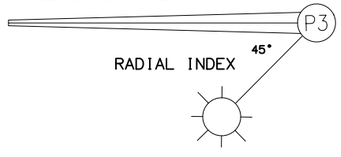

RADIAL INDEX

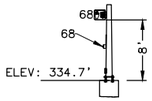

SIGNAL POLE 7
LOOKING EAST

STATE OF ALASKA
PS&E REVIEW
AUGUST 2026
PROFESSIONAL ENGINEER

DOWL, LLC
5015 BUSINESS PARK BLVD
SUITE 4000
ANCHORAGE, AK 99503
(907) 562-2000
#AECL848 - AK

STATE OF ALASKA
DEPARTMENT OF TRANSPORTATION
AND PUBLIC FACILITIES

HERMON RD EXTENSION AND UPGRADE, PARKS HWY TO PALMER-WASILLA HWY

PALMER-WASILLA HIGHWAY & HERMON ROAD: POLE ELEVATIONS

NO.	DATE	REVISION

STATE	PROJECT DESIGNATION	YEAR	SHEET NO.	TOTAL SHEETS
ALASKA	0001729/CFHWY00799	2027	HA6	HA6

CONTROLLER CABINET FEATURES

GENERAL OPTIONS	
TYPE	TS2-1
SIZE	NEMA SIZE 7
MATERIALS	0.125" NATURAL ALUMINUM
MODEL	ECONOLITE TS2 TYPE 1 PLUG-N-GO
MOUNTING HARDWARE	INCLUDED
PAINT	NONE
SPECIAL OPTIONS	
LIFTING TABS	INCLUDED
EQUIPMENT SHELF	(3) FULL WIDTH, 12" WITH FRONT AND BACK LIP
	(1) FULL WIDTH, 14" WITH FRONT AND BACK LIP AND ADDITIONAL BRACING
AIR FILTER	FIBER MESH
MAIN DOOR LOCK	AK STATE CR1
REAR DOOR	INCLUDED, FULL SIZE, TOP AND BOTTOM BRACKET
LED STRIP	(2) 24" (1) TOP OF CAB, (1) UNDER CONTROLLER SHELF
T-STAT CONTROLLED EXHAUST FANS	(2) FANS ON SEPARATE THERMOSTATS
MAIN PANEL	
16 POSITION	(2) EIGHT POSITION ROWS, STACKED
LOAD SWITCH TEST SOCKET	(1) INCLUDED
RESISTOR LOCATION	SIDEWALL
FLASH TRANSFER RELAYS SOCKETS	(6) INCLUDED
FLASHER SOCKETS	(2) INCLUDED
K1 RELAY SOCKET	INCLUDED
POWER PANEL	
POWER INTERFACE MODULE (PIM)	INCLUDED
SURGE SUPPRESSION	ACP-340
LINE FILTER (RADIO INTERFERENCE)	50A
SOLID STATE CONTACTOR	NORMALLY OPEN
CONTROL EQUIPMENT BREAKER	40A
AUXILIARY CIRCUIT BREAKER	20A
GFI LOCATION	POWER PANEL
2 POSITION TERMINAL BLOCK #6 U.S.G.	INCLUDED
16 POSITION NEUTRAL BUS BAR	INCLUDED
16 POSITION CHASSIS GROUND BUS BAR	INCLUDED
EATON MODEL HS-P-SP-120-60-RJ SURGE PROTECTOR OR APPROVED EQUAL	INCLUDED
POLICE PANEL	
POLICE PANEL	INCLUDED
POLICE PANEL SWITCHES	SIGNALS ON/OFF, AUTO/FLASH
POLICE PANEL PUSHBUTTON ALARM	INCLUDED
POLICE DOOR LOCK	SKELETON
POLICE PANEL MANUAL CORD	NONE
RJ45 PORT	INCLUDED
USB PORT	INCLUDED
AUXILIARY PANEL	
AUXILIARY PANEL TOGGLE SWITCHES	AUTO/FLASH, STOP TIME, CONTROLLER POWER, COORD/FREE, HEATER BY-PASS, FO1, FO2 WITH TOGGLE SWITCH COVERS
DETECTOR TEST SWITCHES	TACTILE PUSHBUTTON
RACK DETECTION	
DETECTOR RACKS	(1) 8-CHANNEL RACK WITH 2 SLOTS FOR RAILROAD PREEMPTION, BIU POWER SUPPLY
	(1) 2-CHANNEL RACK FOR EVP, 120V POWER SUPPLY
EVP REQUIREMENTS	WIRING FOR EVP RACK W/GREENS
ADDITIONAL OPTIONS	
RAILROAD PREEMPTION	2 CHANNELS OF RAILROAD PREEMPTION INCLUDED
RAILROAD PREEMPTION/STAND ALONE PANEL	INCLUDED
RED JUMPERS FOR ALL UNUSED PHASES	INCLUDED
LOAD RESISTORS	(8) INCLUDED
ADDITIONAL GFI OUTLET (NON-FILTERED)	INCLUDED
DOUBLE DUPLEX CONVENIECE OUTLET	(1) LEFT WALL FILTERED, (1) RIGHT WALL NON-FILTERED
DUPLEX OUTLET	FOR HEATER AUTO & BYPASS SWITCH, ON DOOR
POWER STRIP	(8) FILTERED CONVENIENCE OUTLETS MOUNTED ABOVE CONTROLLER SHELF INCLUDED
ADDITIONAL NEUTRAL BUS BARS	(1) 16 POSITION BUS BAR RIGHT SIDE OF CABINET
	(1) 32 POSITION BUS BAR LEFT SIDE OF CABINET
	(1) 16 POSITION BUS BAR RIGHT SIDE FOR ISOLATED NEUTRALS
ADDITIONAL CHASSIS GROUND BUS BARS	(1) 16 POSITION BUS BAR RIGHT SIDE OF CABINET
	(1) 16 POSITION BUS BAR LEFT SIDE OF CABINET
GTT OPTICOM 757 HARNESS	INCLUDED - WIRED INTO CABINET
INTERSECTION DRAWINGS	PROVIDE: (3) PAPER SETS, (1) AUTOCAD FILE, (1) PDF.
SDLC CABLES	(10)

CONTROLLER ASSEMBLY EQUIPMENT

SUPPLY ALL LABOR, EQUIPMENT AND MATERIALS TO PROVIDE A FULLY FUNCTIONING TRAFFIC SIGNAL CONTROLLER ASSEMBLY COMPLIANT WITH THE NEMA STANDARD PUBLICATION NO. TS2-2003 V02.06 AND SPECIAL "SPECIALS" PROVISIONS OF THIS CONTRACT INCLUDING BUT NOT LIMITED TO;

QTY	CONTROLLER/MMU EQUIPMENT
1	ECONOLITE COBALT CONTROLLER
1	CONTROLLER ETHERNET PORT
1	CONTROLLER DATA KEY
1	ECONOLITE MMU2-16LEIP
1	MMU2 CARD
QTY	**CABINET EQUIPMENT**
24	RENO LS-200 OR APPROVED EQUAL LOAD SWITCHES
6	RENO TR-200 OR APPROVED EQUAL FLASH TRANSFER RELAYS
5	ECONOLITE BIU-64 TERMINAL AND FACILITIES BIU'S
1	ECONOLITE BIU-64 DETECTION BIU
1	ECONOLITE PS-2412 TS2 CABINET POWER SUPPLY
2	ECONOLITE 801 FLASHER
1	K1 RELAY
3	750/1500W SELECTABLE THERMOSTATICALLY CONTROLLED CABINET HEATER, MOUNT ON DOOR
1	THERMOSTAT, MOUNT ON DOOR
1	COMPLETE SET OF MANUALS FOR CONTROLLER AND MMU

COMMUNICATION EQUIPMENT SCHEDULE

QTY	FIBER INTERCONNECT EQUIPMENT
3	5 FOOT CAT6 RJ45 PATCH CABLE
1	6 FOOT CAT6 RJ45 PATCH CABLE
3	3 FOOT LC TO LC DUPLEX SM PATCH CABLE
1	6 FOOT LC TO LC DUPLEX SM PATCH CABLE
0	3 FOOT SC TO LC DUPLEX SM PATCH CABLE
0	6 FOOT SC TO LC DUPLEX SM PATCH CABLE
0	3 FOOT SC TO SC DUPLEX SM PATCH CABLE
0	6 FOOT SC TO SC DUPLEX SM PATCH CABLE
1	PATCH PANEL - 6 STEP LC SM DUPLEX CONNECTORS (12 FIBERS SPLICED)
0	PATCH PANEL - 6 STEP SC SM DUPLEX CONNECTORS (12 FIBERS SPLICED)
0	SFP OPTICS GB SM 1310NM 10KM LC TRANSCEIVER OR APPROVED EQUAL
0	SFP 1112-1 GB RJ45 TRANSCEIVER
0	RSP1300 802.at POE EXTERNAL POWER SUPPLY
0	WALL MOUNTING KIT
0	RSG920P ETHERNET SWITCH OR APPROVED EQUAL (LC FIBER SFPS)
0	RS900G ETHERNET SWITCH OR APPROVED EQUAL (SC CONNECTORS)
1	RSL930 ETHERNET SWITCH (COPPER AND FIBER) OR APPROVED EQUAL (LC FIBER SFPS)
QTY	**OTHER EQUIPMENT**
0	ATSI PCMT-2600 MMU TESTER W/MMU & CMU CABLES
0	FULLY FUNCTIONING TRAFFIC SIGNAL CONTROLLER, MASTER CONTROLLER AND CABINET
0	INDUCTIVE LOOP TEST KITS
0	LOOP FINDERS
0	BIU TESTERS
0	FRAME GRABBER
0	MULTI-SWITCH TESTER
0	BIU SLOT TESTER
0	CARD RACK SLOT TESTER
0	DETECTOR TESTER
0	MCCAIN CID II
0	RADIO SITE SURVEY LOCATIONS
0	INTX DIAGRAM LOCATIONS
1	UPS INVERTER
4	UPS BACKUP BATTERY
0	BATTERY HEAT PAD
QTY	**EVP EQUIPMENT**
1	OPTICOM MODEL 764 PHASE SELECTOR
0	OPTICOM MODEL 794HM EMITTERS W/2100 CONTROL UNITS
QTY	**RADAR OPTION 1 EQUIPMENT**
2	ARC 6 (102-0594)
1	INSTALLER KIT
1	7' SDLC CABLE - 15 PIN SCREW TO 15 PIN SPRING CLIP (SDLC-TS2-7)
1	SDLC 6 PORT INTERFACE PANEL (SDLC-IP6)

STATE OF ALASKA - PS&E REVIEW AUGUST 2026 - PROFESSIONAL ENGINEER

DOWL, LLC
5015 BUSINESS PARK BLVD
SUITE 4000
ANCHORAGE, AK 99503
(907) 562-2000
#AECL848 - AK

STATE OF ALASKA
DEPARTMENT OF TRANSPORTATION
AND PUBLIC FACILITIES

HERMON RD EXTENSION AND UPGRADE, PARKS HWY TO PALMER-WASILLA HWY

PALMER-WASILLA HIGHWAY & HERMON ROAD: TRAFFIC CONTROLLER EQUIPMENT

DESIGNED BY SRT
CHECKED BY KLK
DRAFTED BY JHK
SCALE
DATE TIME 8/7/2026 11:18 AM
DRAWING LOCATION C:\DOWL_PW\00433398\00799-SL-SIGNAL.DWG

NO.	DATE	REVISION

STATE	PROJECT DESIGNATION	YEAR	SHEET NO.	TOTAL SHEETS
ALASKA	0001729/CFHWY00799	2027	HS1	HS17

DESIGNED BY: SRT
CHECKED BY: KLK
DRAFTED BY: JHK
SCALE
DATE TIME: 8/7/2026 11:18 AM
DRAWING LOCATION: C:\DOWL_PW\0043398\00799-SL-SIGNAL.DWG

SUMMARY OF NEW LOAD CENTER 'B'

LOAD CENTER TYPE:	TYPE 1A
MAINTAINED BY:	MATANUSKA-SUSITNA BOROUGH
SERVING UTILITY:	MATANUSKA ELECTRIC ASSOCIATION
SERVICE CONDUIT TYPE:	RIGID METAL CONDUIT
LOCATION DATA	
LOAD CENTER:	SE CORNER PWH AT HERMON RD
POWER SOURCE:	NEW LINE EXTENSION
PHOTOELECTRIC CONTROL:	AT LOAD CENTER
SERVICE VOLTAGE:	120/240V, 1-PHASE
PROVIDE METER SOCKET:	NEW
MAIN BREAKER A:	240V, 100A, 2-POLE
CONTACTOR 1:	600V, 12-POLE, 30A
AIC RATING:	10,000A

PANEL A

CKT	AMP TRIP	DESCRIPTION	CKT KVA	AØ	BØ	CKT KVA	DESCRIPTION	AMP TRIP	CKT
1	15/2	PHOTOCELL	0.1	0.2		0.1	*INTERSECTION-WEST LTG L5,L6	20/2	2
3			0.1		0.2	0.1			4
5			0.0	0.0		0.0			6
7			0.0		0.0	0.0			8
9			0.0	0.0		0.0			10
11			0.0		0.0	0.0			12
13			0.0	0.0		0.0			14
15			0.0		0.0	0.0			16
17			0.0	0.0		0.0			18
* = THROUGH CONTACTOR				0.2	0.2		TOTAL KVA		0.4
							AMPS		1.7

SHORT CIRCUIT CALCULATION - LC 'B'

TRANSFORMER RATING	25KVA
VOLTAGE	120/240V
TRANSFORMER IMPEDANCE	1.2%
AVAILABLE SHORT CIRCUIT CURRENT AT TRANSFORMER SECONDARY	8,680A
SERVICE CONDUCTOR LENGTH	40'
SERVICE CONDUCTOR SIZE	2 AWG ALUM
CONDUIT	PVC
MAXIMUM FAULT CURRENT	5,214A
DATE CALCULATED	1/29/2025

ARC FLASH CALCULATION - LC 'B'

INCIDENT ENERGY	11.1 cal/cm²
ARC-FLASH BOUNDARY	73"
WORKING DISTANCE	18"
INSULATING GLOVES CLASS	00
NOMINAL SYSTEM VOLTAGE	240V
LIMITED APPROACH BOUNDARY	42"
RESTRICTED APPROACH BOUNDARY	12"
CALCULATION DATE	12/15/2025

LUMINAIRE STANDARDS

PALMER-WASILLA HIGHWAY/HERMON ROAD INTERSECTION

MANUFACTURER AND MODEL (OR APPROVED EQUAL)	GE ERL1	COOPER ARCH-M	LEOTEK GCM2
WATTAGE (MAXIMUM)	110W	101W	89W
VOLTAGE	240V		
PE CONTROL	ANSI C136.41 7 PIN W/ SHORTING CAP		
PE SENSOR	SHORTING CAP		
MOUNTING	HORIZONTAL		
HOUSING ENTRY TYPE	TOOLLESS		
FIXTURE COLOR	GRAY		
IES DISTRIBUTION TYPE	MC3		
POWER FACTOR	≥0.90		
UL LISTED	YES		
CCI	3000K		
CRI	MINIMUM 70		
INITIAL LUMENS	13400	14410	13169

LUMINAIRE PERFORMANCE CRITERIA

PALMER-WASILLA HIGHWAY/HERMON ROAD INTERSECTION

LUMINAIRE LIGHT LOSS FACTOR	0.85
LIGHTING CALCULATION METHOD	ANSI/IES RP-8-2014
INTERSECTION CHARACTERISTICS	
PAVEMENT TYPE	R3
FUNCTIONALL CLASSIFICATION	MAJOR/COLLECTOR
PEDESTRIAN AREA CLASSIFICATION	LOW
INTERSECTION ILLUMINANCE CRITERIA	
AVERAGE MAINTAINED ILLUMINATION (fc)	1.4
AVERAGE UNIFORMITY RATIO (AVG/MIN)	3.0

LUMINAIRE STANDARDS

E. TYSONS TRAIL/HERMON ROAD INTERSECTION

MANUFACTURER AND MODEL (OR APPROVED EQUAL)	GE ERL1	COOPER ARCH-M	LEOTEK GCM1
WATTAGE (MAXIMUM)	93W	92W	72W
VOLTAGE	240V		
PE CONTROL	ANSI C136.41 7 PIN W/ SHORTING CAP		
PE SENSOR	SHORTING CAP		
MOUNTING	HORIZONTAL		
HOUSING ENTRY TYPE	TOOLLESS		
FIXTURE COLOR	GRAY		
IES DISTRIBUTION TYPE	MC3		
POWER FACTOR	≥0.90		
UL LISTED	YES		
CCI	3000K		
CRI	MINIMUM 70		
INITIAL LUMENS	11500	13317	10999

LUMINAIRE PERFORMANCE CRITERIA

E. TYSONS TRAIL/HERMON ROAD INTERSECTION

LUMINAIRE LIGHT LOSS FACTOR	0.85
LIGHTING CALCULATION METHOD	ANSI/IES RP-8-2014
INTERSECTION CHARACTERISTICS	
PAVEMENT TYPE	R3
FUNCTIONALL CLASSIFICATION	COLLECTOR/LOCAL
PEDESTRIAN AREA CLASSIFICATION	LOW
INTERSECTION ILLUMINANCE CRITERIA	
AVERAGE MAINTAINED ILLUMINATION (fc)	0.9
AVERAGE UNIFORMITY RATIO (AVG/MIN)	4.0

STATE OF ALASKA
PS&E REVIEW
AUGUST 2026
PROFESSIONAL ENGINEER

DOWL, LLC
5015 BUSINESS PARK BLVD
SUITE 4000
ANCHORAGE, AK 99503
(907) 562-2000
#AECL848 - AK

STATE OF ALASKA
DEPARTMENT OF TRANSPORTATION
AND PUBLIC FACILITIES

HERMON RD EXTENSION AND UPGRADE, PARKS HWY TO PALMER-WASILLA HWY

LOAD CENTER AND ILLUMINATION SCHEDULES

NO.	DATE	REVISION

STATE	PROJECT DESIGNATION	YEAR	SHEET NO.	TOTAL SHEETS
ALASKA	0001729/CFHWY00799	2027	HS2	HS17

DESIGNED BY SRT
CHECKED BY KLK
DRAFTED BY JHK
SCALE
DATE TIME 8/7/2026 11:18 AM
DRAWING LOCATION C:\DOWL_PW\D0433398\00799-SL-SIGNAL.DWG

ELECTROLIER SCHEDULE

POLE NO.	STATION ALIGNMENT	OFFSET	MOUNTING HEIGHT	SHAFT LENGTH	MASTARM LENGTH	FOUNDATION	LOAD CENTER	CIRCUIT	REMARKS
21	"PW" 903+41.6	32.9 RT	40	39.0'	12	STEEL PILE	LC-A	AA6/8	
31	"HR" 51+79.6	27.3 RT	40	40.5'	8	STEEL PILE	LC-A	AA6/8	
41	"PW" 906+25.8	28.8 LT	40	39.0'	12	STEEL PILE	LC-A	AA6/8	
5	"HR" 20+96.9	36.6 LT	40	37.5'	15	STEEL PILE	LC-B	BA2/4	
6	"HR" 22+06.3	33.1 RT	40	35.0'	15	STEEL PILE	LC-B	BA2/4	

FOUNDATION SCHEDULE

ITEM	STATION ALIGNMENT	OFFSET	TYPE	REMARKS
LC-B	"HR" 20+84.0	39.1 LT	1A	LOAD CENTER

INTERCONNECT SCHEDULE

VAULT	STATION ALIGNMENT	OFFSET	TYPE
1	"PI" 1+32.7	71.4 RT	FIBER VAULT
2	"HR" 10+56.7	76.2 RT	FIBER VAULT
3	"HR" 11+74.3	59.2 RT	FIBER VAULT
4	"HR" 21+47.2	29.2 RT	FIBER VAULT
5	"HR" 30+93.1	29.1 RT	FIBER VAULT
6	"HR" 30+93.1	41.6 LT	FIBER VAULT
7	"HR" 40+83.7	36.7 LT	FIBER VAULT
8	"HR" 52+69.6	55.4 LT	FIBER VAULT

JUNCTION BOX SCHEDULE

J-BOX	STATION ALIGNMENT	OFFSET	TYPE	REMARKS
5	"HR" 20+96.9	39.2 LT	1A	LIGHTING
6	"HR" 22+06.3	35.3 RT	1A	LIGHTING

PARKS HIGHWAY/ HERMON ROAD COMMUNICATION EQUIPMENT SCHEDULE

QTY	FIBER INTERCONNECT EQUIPMENT
3	5 FOOT CAT6 RJ45 PATCH CABLE
1	6 FOOT CAT6 RJ45 PATCH CABLE
3	3 FOOT LC TO LC DUPLEX SM PATCH CABLE
1	6 FOOT LC TO LC DUPLEX SM PATCH CABLE
0	3 FOOT SC TO LC DUPLEX SM PATCH CABLE
0	6 FOOT SC TO LC DUPLEX SM PATCH CABLE
0	3 FOOT SC TO SC DUPLEX SM PATCH CABLE
0	6 FOOT SC TO SC DUPLEX SM PATCH CABLE
1	PATCH PANEL - 6 STEP LC SM DUPLEX CONNECTORS (12 FIBERS SPLICED)
0	PATCH PANEL - 6 STEP SC SM DUPLEX CONNECTORS (12 FIBERS SPLICED)
0	SFP OPTICS GB SM 1310NM 10KM LC TRANSCEIVER OR APPROVED EQUAL
0	SFP 1112-1 GB RJ45 TRANSCEIVER
0	RSP1300 802.at POE EXTERNAL POWER SUPPLY
0	WALL MOUNTING KIT
0	RSG920P ETHERNET SWITCH OR APPROVED EQUAL (LC FIBER SFPS)
0	RS900G ETHERNET SWITCH OR APPROVED EQUAL (SC CONNECTORS)
1	RSL930 ETHERNET SWITCH (COPPER AND FIBER) OR APPROVED EQUAL (LC FIBER SFPS)

PARKS HIGHWAY/ PALMER-WASILLA HWY COMMUNICATION EQUIPMENT SCHEDULE

QTY	FIBER INTERCONNECT EQUIPMENT
1	RSL930 ETHERNET SWITCH (COPPER AND FIBER) OR APPROVED EQUAL (LC FIBER SFPS)

FIBER INERCONNECT SYSTEM NOTES:

1. INSTALL RMC CONDUITS AT ALL APPROACH AND COMMERCIAL DRIVEWAY CROSSINGS.
2. AVOID USING CONDUIT ELBOW FITTINGS IN SYSTEM. WHEN CONDUIT ELBOW FITTINGS ARE NECESSARY, PROVIDE SPECIAL LARGE RADIUS ELBOW FITTINGS WITHA MINIMUM RADIUS OF 36".

STATE OF ALASKA
PROFESSIONAL ENGINEER
PS&E REVIEW
AUGUST 2026

DOWL, LLC
5015 BUSINESS PARK BLVD
SUITE 4000
ANCHORAGE, AK 99503
(907) 562-2000
#AECL848 - AK

STATE OF ALASKA
DEPARTMENT OF TRANSPORTATION
AND PUBLIC FACILITIES

HERMON RD EXTENSION AND UPGRADE, PARKS HWY TO PALMER-WASILLA HWY

ELECTROLIER, INTERCONNECT, AND JUNCTION BOX SCHEDULES

DATE	TIME
8/7/2026	11:18 AM

SCALE
1" = 20'

DESIGNED BY	JHK
CHECKED BY	ST
DRAFTED BY	JHK

DRAWING LOCATION
C:\DOWL_PW\00433998\00799_HS.DWG

SHEET NO.	TOTAL SHEETS
HS3	HS17
STATE	YEAR
ALASKA	2027

PROJECT DESIGNATION
0001729/
CFHWY00799

NO.	REVISION
DATE	
NO.	REVISION
DATE	
NO.	REVISION
DATE	

BEGIN PROJECT
STA. 10+50.00
MATCH EXISTING PAVEMENT
N 142449.0890
E 434380.3868

"HR" 10+00 "HR" 11+00 "HR" 12+00 "HR" 13+00 "HR" 14+00

SOUTH HERMON ROAD

MATCH LINE STA. 14+50

PROP ROW

ROW

EAST SUN MOUNTAIN AVENUE

MOUNTAIN VILLAGE DRIVE ACCESS

HDD BETWEEN FIBER VAULTS A AND B

2"1-F/O CABLE 1-LOCATE WIRE

EXISTING TRAFFIC CONTROLLER, SEE SHEET HS2 FOR NEW COMMUNICATION EQUIPMENT

CROSSWALK POINT TABLE		
POINT	STATION	OFFSET
1	"HR" 11+61.51	43.08' RT
2	"HR" 11+78.37	58.96' LT
3	"HR" 11+78.55	25.86' RT
4	"HR" 11+89.33	39.44' LT

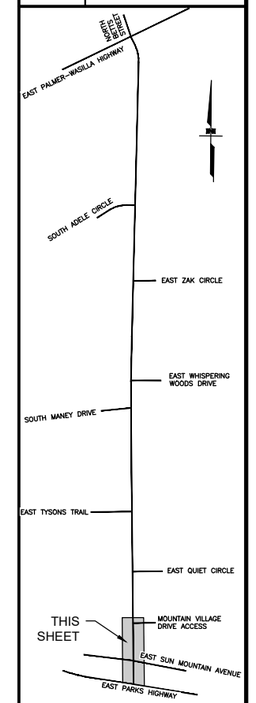

STATE OF ALASKA
PS&E REVIEW
AUGUST 2026
PROFESSIONAL ENGINEER

DOWL, LLC
5015 BUSINESS PARK BLVD
SUITE 4000
ANCHORAGE, AK 99503
(907) 562-2000
#AECL848 – AK

STATE OF ALASKA
DEPARTMENT OF TRANSPORTATION
AND PUBLIC FACILITIES

HERMON ROAD
PARKS HIGHWAY TO PALMER-WASILLA HIGHWAY

SIGNING, STRIPING, ILLUMINATION & INTERCONNECT BOP TO "HR" 14+50

DRAWING LOCATION
C:\DOWL_PW\D0433398\007899_HS.DWG

DESIGNED BY	JHK
CHECKED BY	ST
DRAFTED BY	JHK

SCALE: 1" = 20'

DATE: 8/7/2026
TIME: 11:18 AM

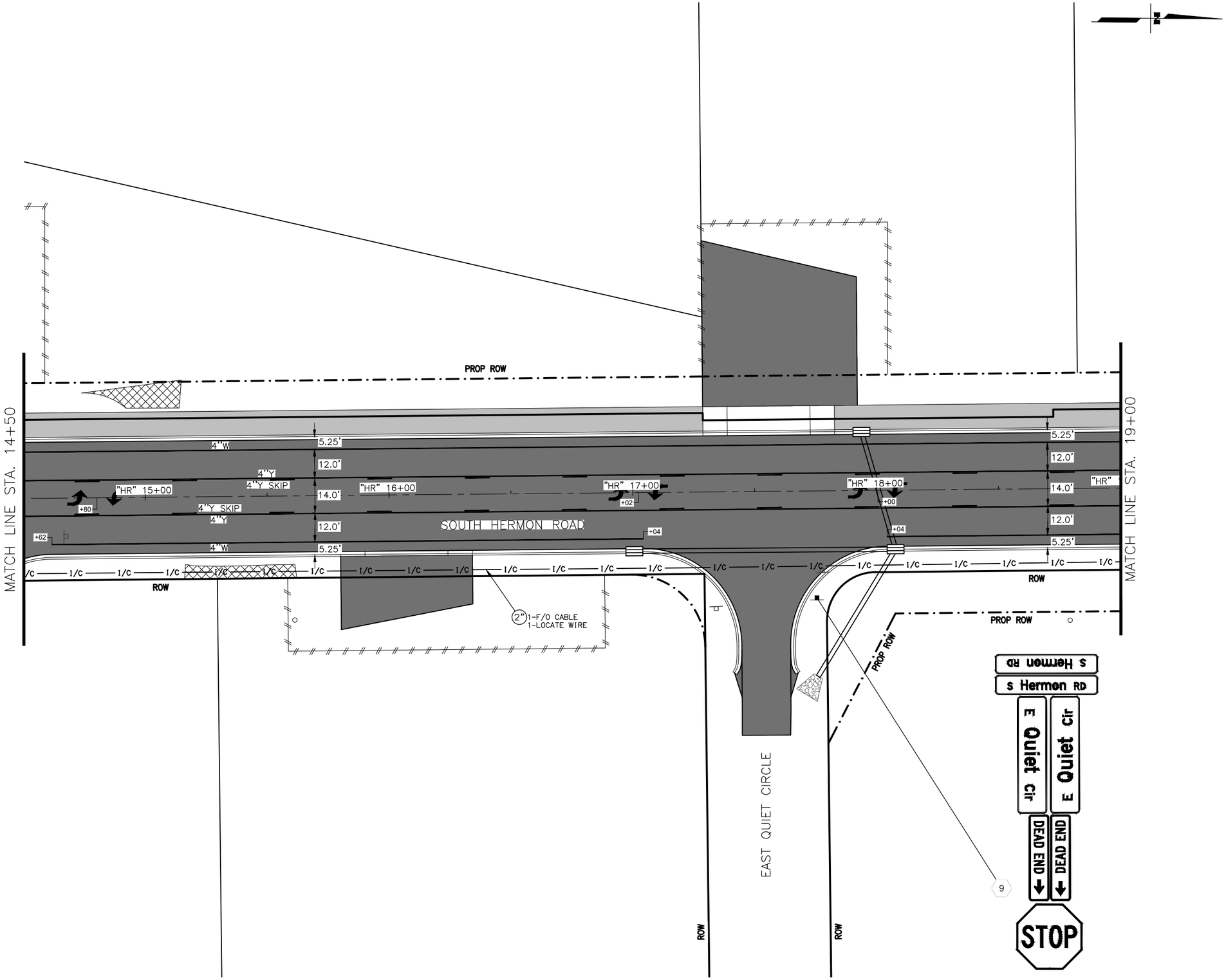

SHEET NO.	TOTAL SHEETS
HS4	HS17
STATE	YEAR
ALASKA	2027

PROJECT DESIGNATION
0001729/
CFHWY00799

NO.	REVISION
DATE	
NO.	REVISION
DATE	
NO.	REVISION
DATE	

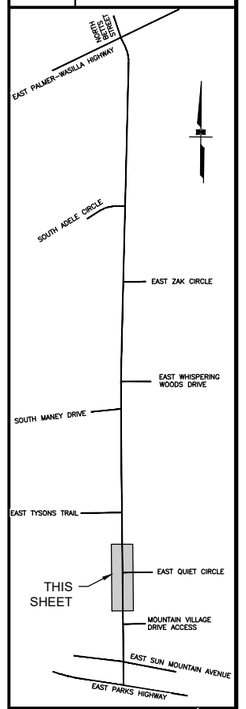

STATE OF AL
PS&E REVIEW
AUGUST 2026
PROFESSIONAL ENGINEER

DOWL, LLC
5015 BUSINESS PARK BLVD
SUITE 4000
ANCHORAGE, AK 99503
(907) 562-2000
#AECL848 – AK

STATE OF ALASKA
DEPARTMENT OF TRANSPORTATION
AND PUBLIC FACILITIES

HERMON ROAD
PARKS HIGHWAY TO
PALMER–WASILLA HIGHWAY

SIGNING, STRIPING, ILLUMINATION & INTERCONNECT "HR" 14+50 TO "HR" 19+00

DRAWING LOCATION
C:\DOWL_PW\D0433398\00799_HS.DWG

DESIGNED BY	JHK
CHECKED BY	ST
DRAFTED BY	JHK

SCALE: 1" = 20'

DATE TIME: 8/7/2026 11:18 AM

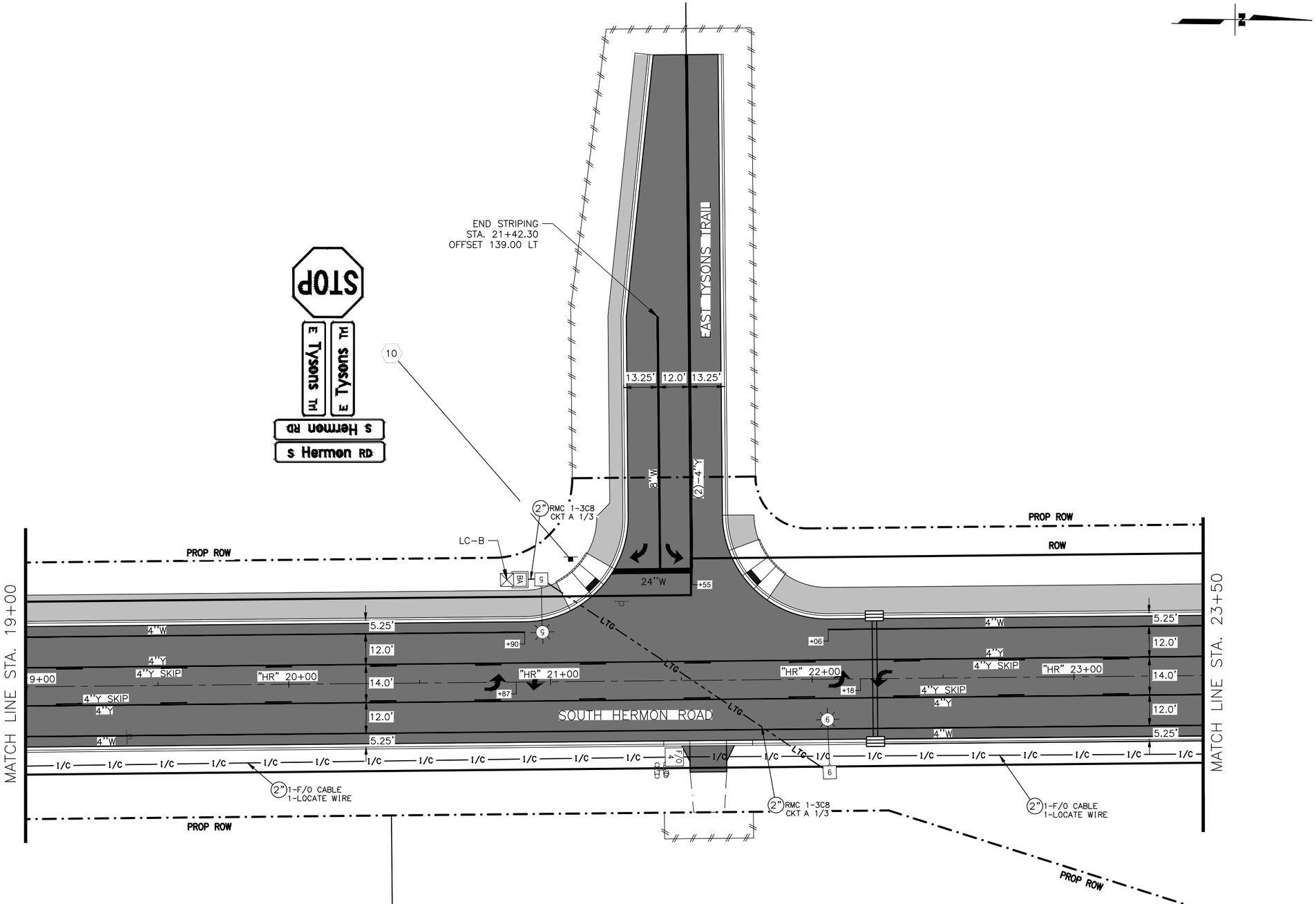

SHEET NO.	TOTAL SHEETS
HS5	HS17
STATE	YEAR
ALASKA	2027

PROJECT DESIGNATION
0001729/
CFHWY00799

NO.	REVISION
DATE	

NO.	REVISION
DATE	

NO.	REVISION
DATE	

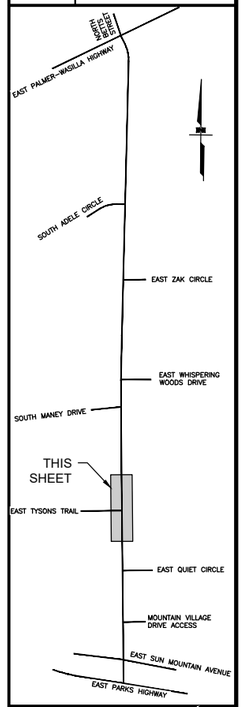

STATE OF ALASKA
PS&E REVIEW
AUGUST 2026
PROFESSIONAL ENGINEER

DOWL, LLC
5015 BUSINESS PARK BLVD
SUITE 4000
ANCHORAGE, AK 99503
(907) 562-2000
#AECL848 - AK

STATE OF ALASKA
DEPARTMENT OF TRANSPORTATION
AND PUBLIC FACILITIES

HERMON ROAD
PARKS HIGHWAY TO
PALMER-WASILLA HIGHWAY

SIGNING, STRIPING, ILLUMINATION & INTERCONNECT "HR" 19+00 TO "HR"23+50

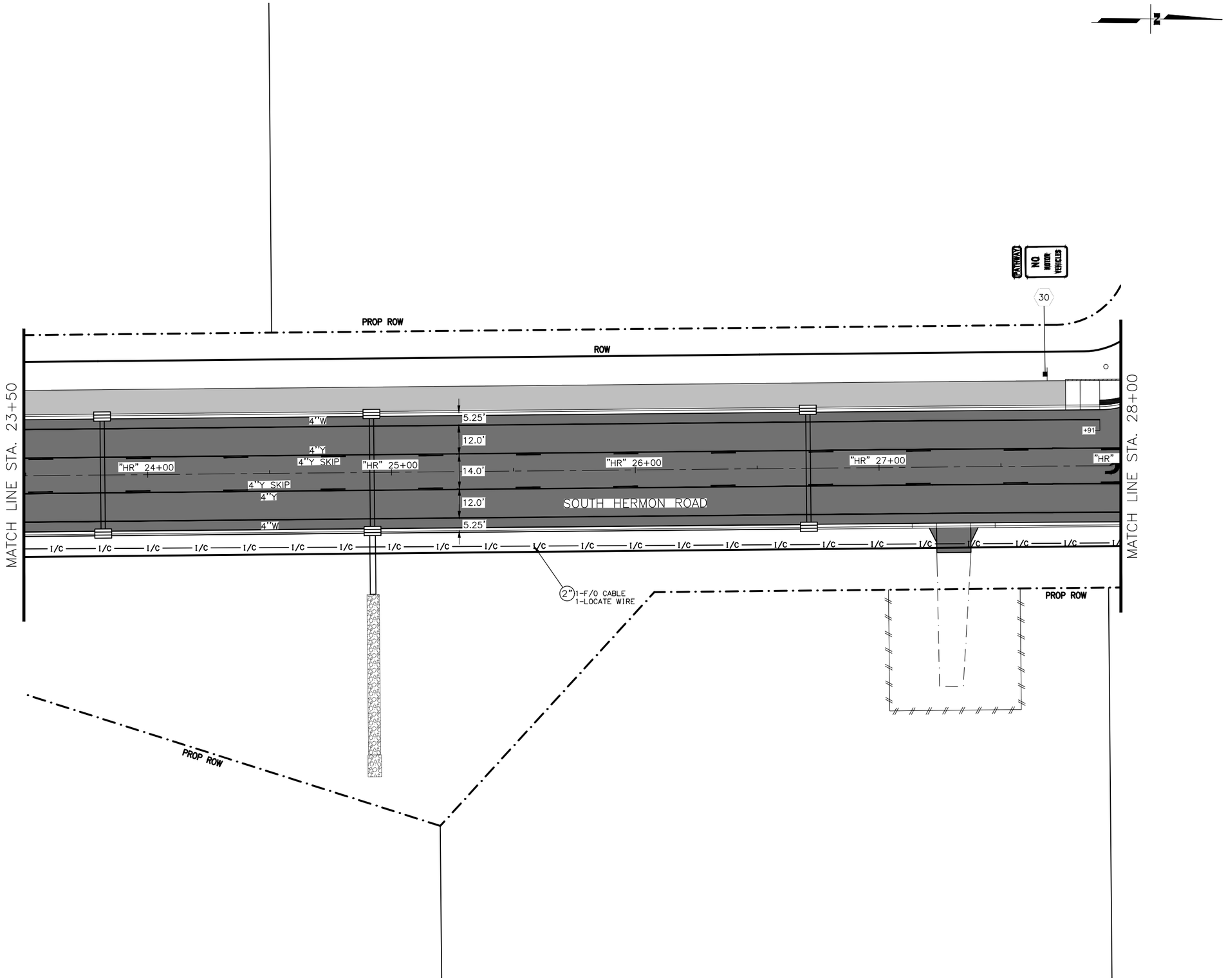

DRAWING LOCATION
C:\DOWL_PW\0043398\007799_HS.DWG

DATE 8/7/2026 TIME 11:18 AM
SCALE 1"= 20'
DESIGNED BY JHK
CHECKED BY ST
DRAFTED BY JHK

SHEET NO.	TOTAL SHEETS
HS6	HS17
STATE	YEAR
ALASKA	2027

PROJECT DESIGNATION
0001729/
CFHWY00799

NO.	REVISION
DATE	
NO.	REVISION
DATE	
NO.	REVISION
DATE	

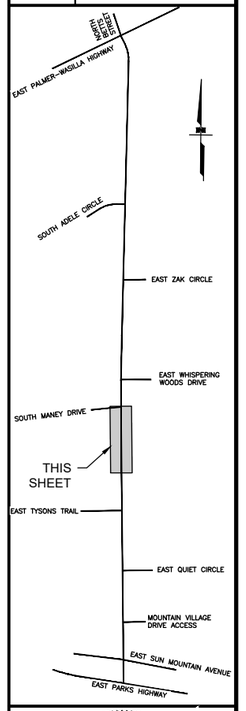

STATE OF AL
PS&E REVIEW
AUGUST 2026
PROFESSIONAL ENGINEER

DOWL, LLC
5015 BUSINESS PARK BLVD
SUITE 4000
ANCHORAGE, AK 99503
(907) 562-2000
#AECL848 – AK

STATE OF ALASKA
DEPARTMENT OF TRANSPORTATION
AND PUBLIC FACILITIES

HERMON ROAD
PARKS HIGHWAY TO
PALMER–WASILLA HIGHWAY

SIGNING, STRIPING, ILLUMINATION & INTERCONNECT "HR" 23+50 TO "HR"28+00

DRAWING LOCATION	DESIGNED BY	DATE	SCALE
C:_DOWL_PW\0043398\00799_HS.DWG	JHK	8/7/2026 11:18 AM	1"= 20'
	CHECKED BY: ST		
	DRAFTED BY: JHK		

SHEET NO.	TOTAL SHEETS
HS7	HS17
STATE	YEAR
ALASKA	2027

PROJECT DESIGNATION

0001729/
CFHWY00799

NO.	REVISION
DATE	
NO.	REVISION
DATE	
NO.	REVISION
DATE	

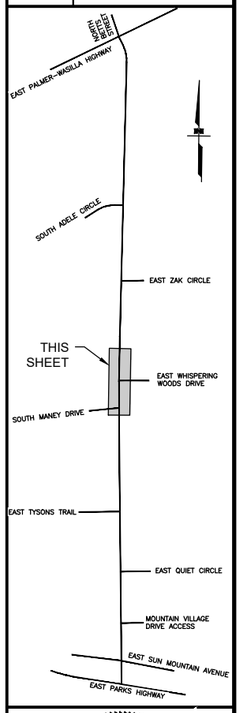

STATE OF ALASKA
PS&E REVIEW
AUGUST 2026
PROFESSIONAL ENGINEER

DOWL, LLC
5015 BUSINESS PARK BLVD
SUITE 4000
ANCHORAGE, AK 99503
(907) 562-2000
#AECL848 - AK

STATE OF ALASKA
DEPARTMENT OF TRANSPORTATION
AND PUBLIC FACILITIES

HERMON ROAD
PARKS HIGHWAY TO
PALMER-WASILLA HIGHWAY

SIGNING, STRIPING, ILLUMINATION & INTERCONNECT "HR" 28+00 TO "HR" 32+50

DRAWING LOCATION
C:\DOWL_PW\0043398\00799_HS.DWG

DESIGNED BY	JHK
CHECKED BY	ST
DRAFTED BY	JHK

SCALE
1" = 20'

DATE TIME
8/7/2026 11:18 AM

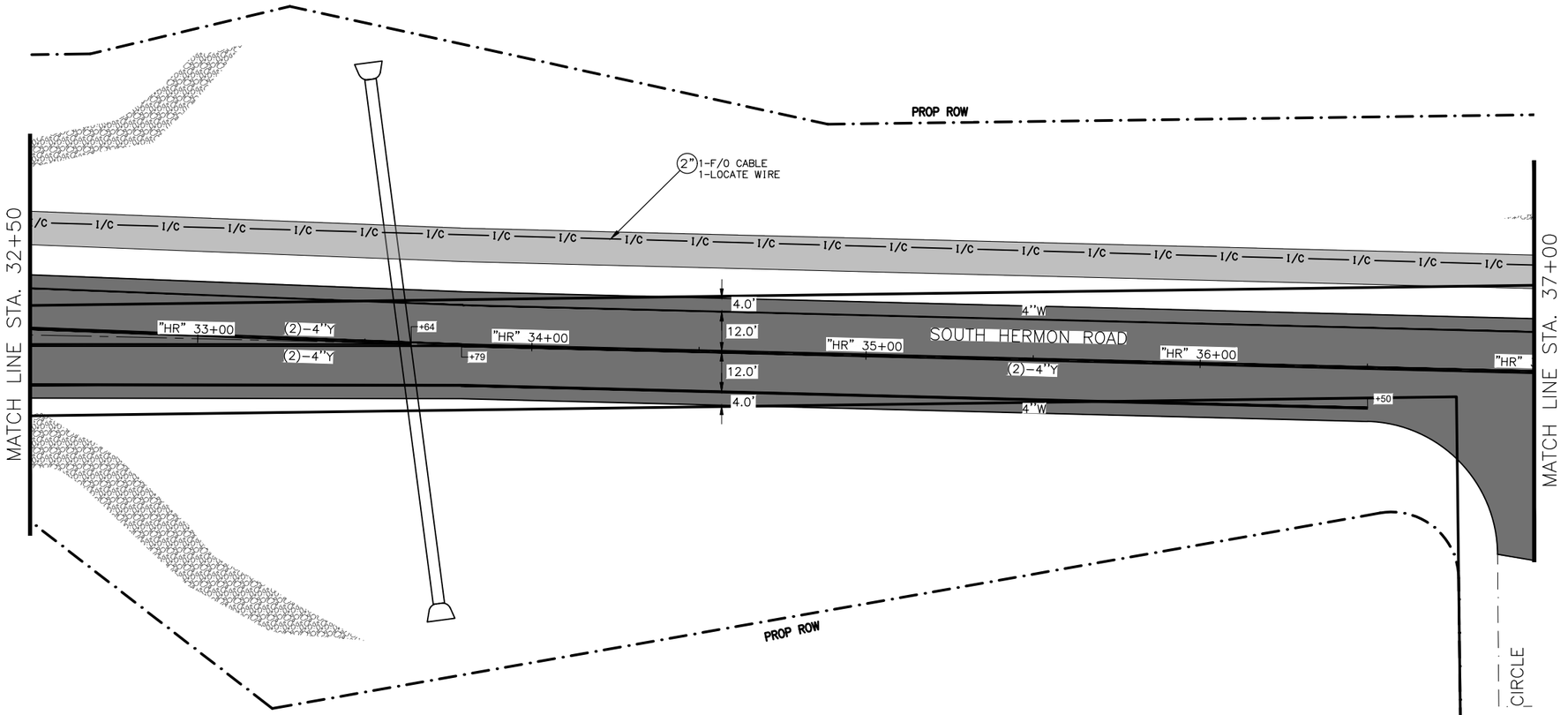

SHEET NO.	TOTAL SHEETS
HS8	HS17
STATE	YEAR
ALASKA	2027

PROJECT DESIGNATION
0001729/
CFHWY00799

NO.	REVISION
DATE	
NO.	REVISION
DATE	
NO.	REVISION
DATE	

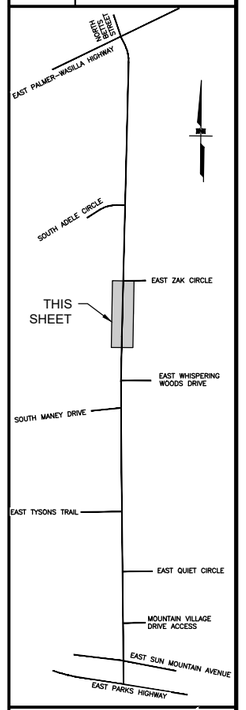

STATE OF AK
PROFESSIONAL ENGINEER
PS&E REVIEW
AUGUST 2026

DOWL, LLC
5015 BUSINESS PARK BLVD
SUITE 4000
ANCHORAGE, AK 99503
(907) 562-2000
#AECL848 - AK

STATE OF ALASKA
DEPARTMENT OF TRANSPORTATION
AND PUBLIC FACILITIES

HERMON ROAD
PARKS HIGHWAY TO
PALMER-WASILLA HIGHWAY

SIGNING, STRIPING, ILLUMINATION & INTERCONNECT "HR" 32+50 TO "HR" 37+00

DESIGNED BY JHK
CHECKED BY ST
DRAFTED BY JHK

SCALE 1/1" = 20'

DATE 8/7/2026 TIME 11:18 AM

DRAWING LOCATION C:\DOWL_PW\0043398\007799_HS.DWG

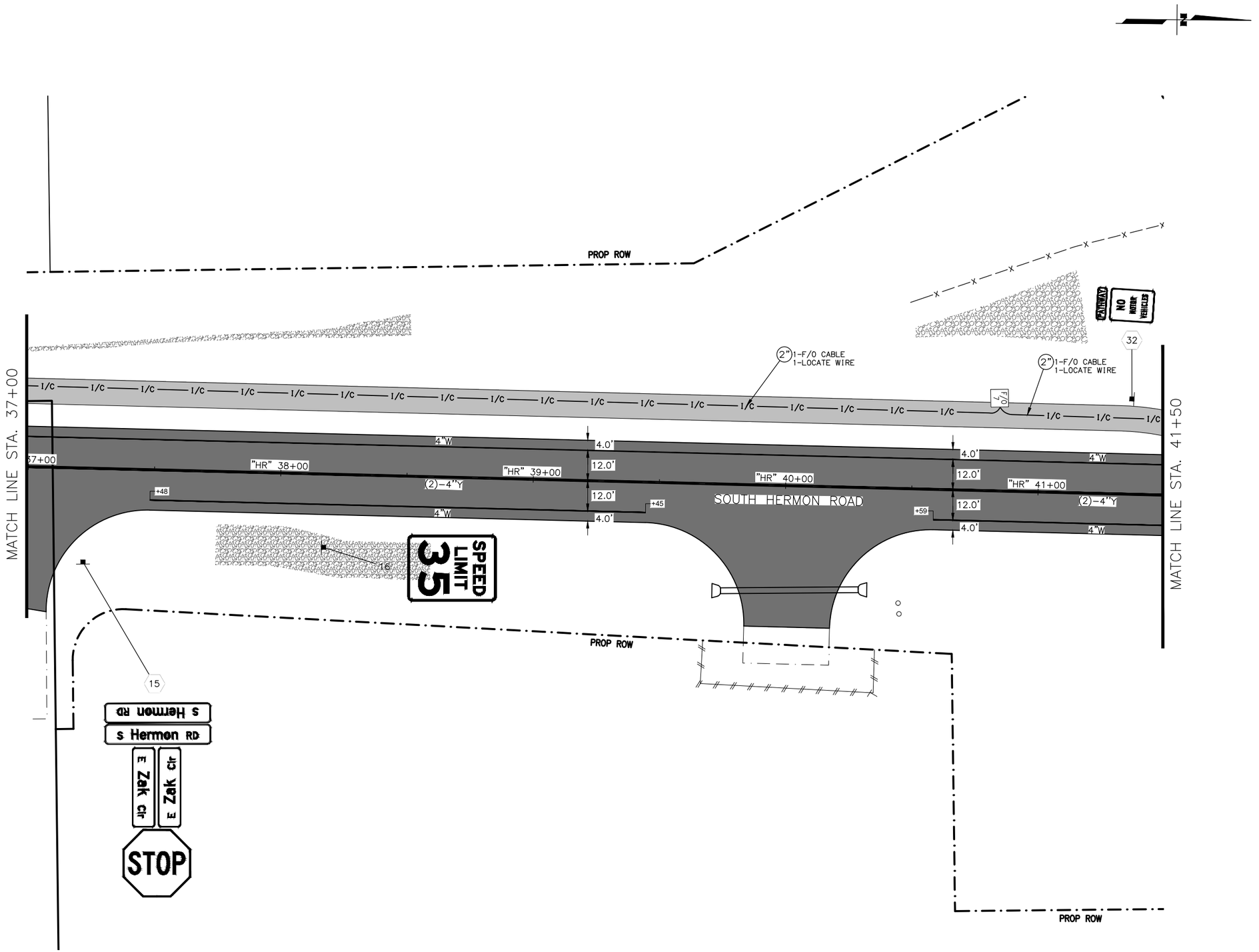

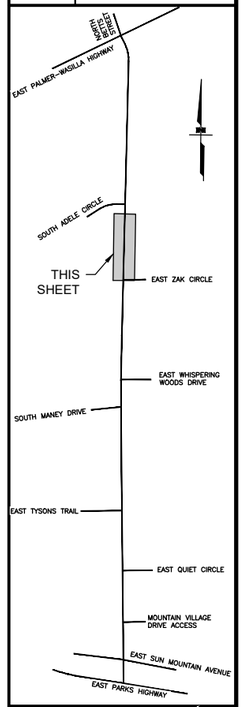

SHEET NO.	TOTAL SHEETS
HS9	HS17
STATE	YEAR
ALASKA	2027

PROJECT DESIGNATION
0001729/
CFHWY00799

NO.	REVISION
DATE	
NO.	REVISION
DATE	
NO.	REVISION
DATE	

STATE OF AL
PS&E REVIEW
AUGUST 2026
PROFESSIONAL ENGINEER

DOWL, LLC
5015 BUSINESS PARK BLVD
SUITE 4000
ANCHORAGE, AK 99503
(907) 562-2000
#AECL848 – AK

STATE OF ALASKA
DEPARTMENT OF TRANSPORTATION
AND PUBLIC FACILITIES

HERMON ROAD
PARKS HIGHWAY TO
PALMER–WASILLA HIGHWAY

SIGNING, STRIPING, ILLUMINATION & INTERCONNECT "HR" 37+00 TO "HR" 41+50

DESIGNED BY	JHK
CHECKED BY	ST
DRAFTED BY	JHK

SCALE: 1"= 20'

DATE TIME: 8/7/2026 11:18 AM

DRAWING LOCATION: C:\DOWL_PW\0043398\00799_HS.DWG

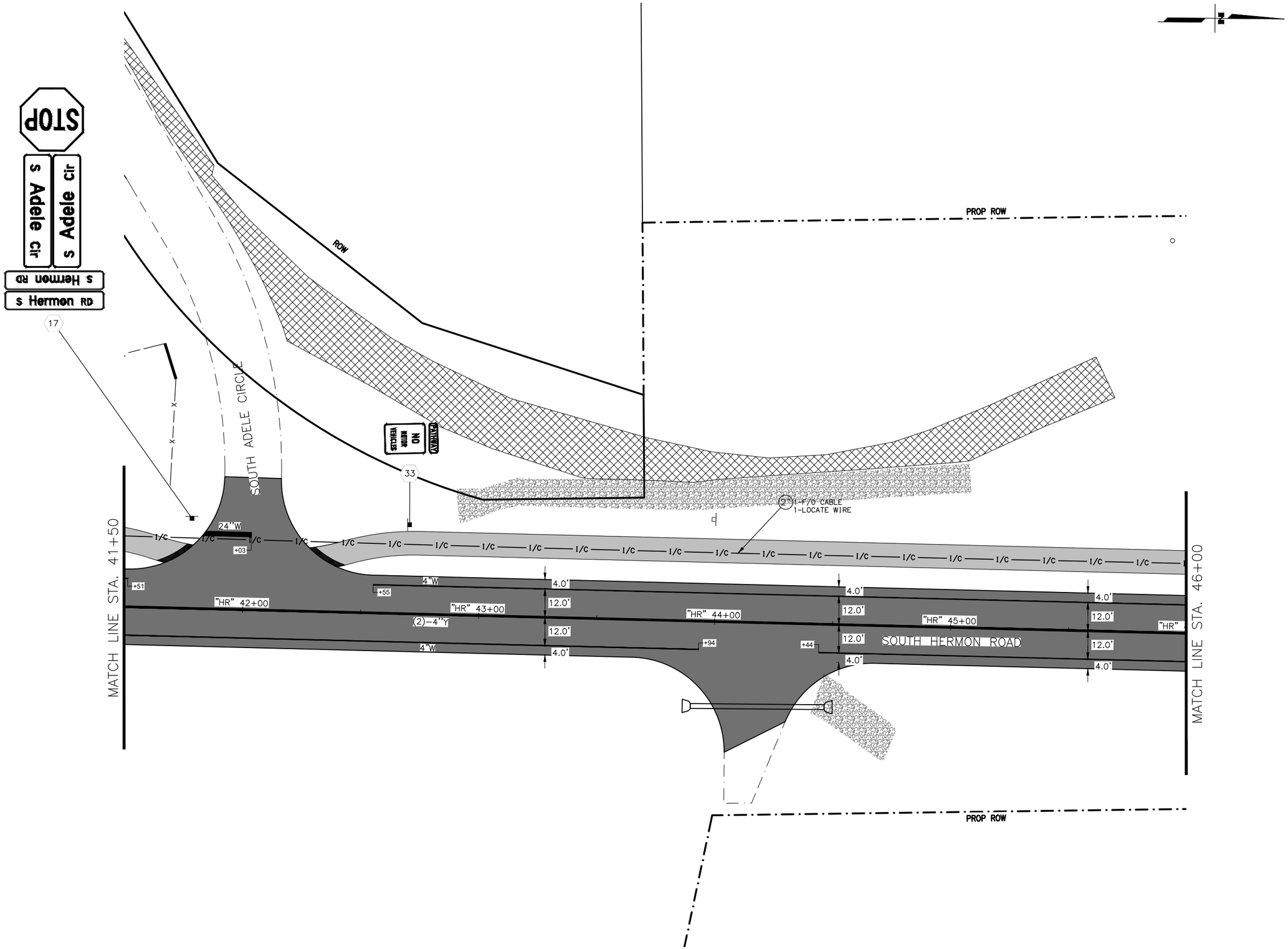

SHEET NO.	TOTAL SHEETS
HS10	HS17
STATE	YEAR
ALASKA	2027

PROJECT DESIGNATION

0001729/
CFHWY00799

NO.	REVISION
DATE	
NO.	REVISION
DATE	
NO.	REVISION
DATE	

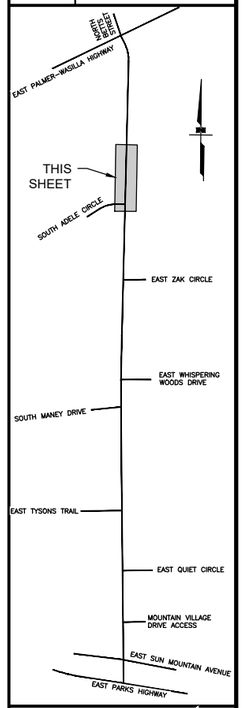

STATE OF ALASKA
PS&E REVIEW
AUGUST 2026
PROFESSIONAL ENGINEER

DOWL, LLC
5015 BUSINESS PARK BLVD
SUITE 4000
ANCHORAGE, AK 99503
(907) 562-2000
#AECL848 – AK

STATE OF ALASKA
DEPARTMENT OF TRANSPORTATION
AND PUBLIC FACILITIES

HERMON ROAD
PARKS HIGHWAY TO
PALMER–WASILLA HIGHWAY

SIGNING, STRIPING, ILLUMINATION & INTERCONNECT "HR" 41+50 TO "HR" 46+00

DRAWING LOCATION
C:\DOWL_PW\0043398\00799_HS.DWG

DESIGNED BY	JHK
CHECKED BY	ST
DRAFTED BY	JHK

SCALE
1" = 20'

DATE TIME
8/7/2026 11:19 AM

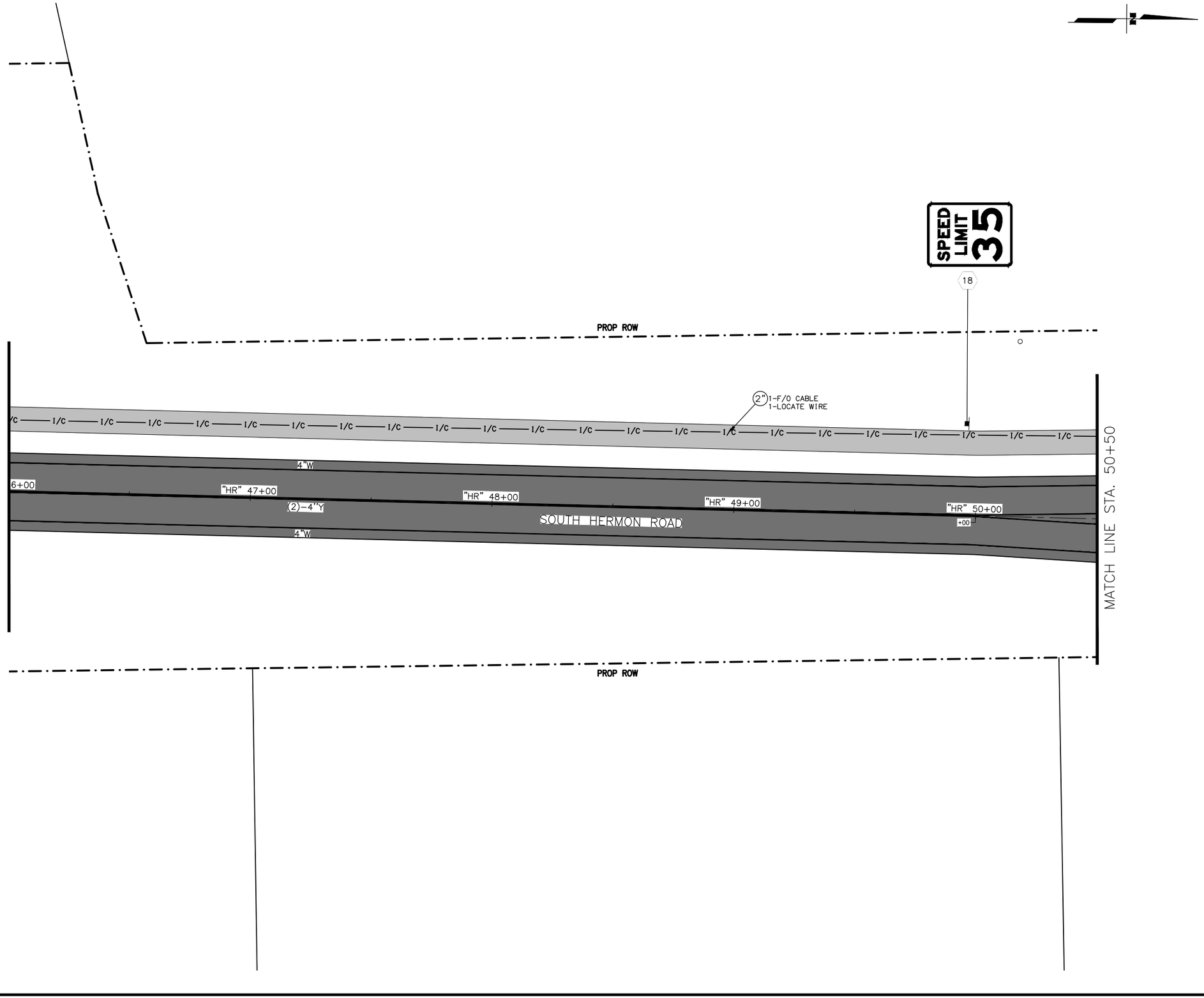

SHEET NO.	TOTAL SHEETS
HS11	HS17
STATE	YEAR
ALASKA	2027

PROJECT DESIGNATION
0001729/
CFHWY00799

NO.	REVISION
DATE	
NO.	REVISION
DATE	
NO.	REVISION
DATE	

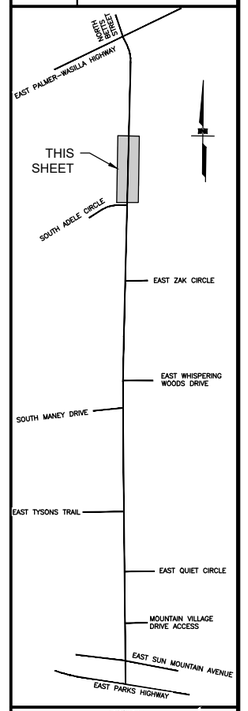

STATE OF AL
PS&E REVIEW
AUGUST 2026
PROFESSIONAL ENGINEER

DOWL, LLC
5015 BUSINESS PARK BLVD
SUITE 4000
ANCHORAGE, AK 99503
(907) 562-2000
#AECL848 - AK

STATE OF ALASKA
DEPARTMENT OF TRANSPORTATION
AND PUBLIC FACILITIES

HERMON ROAD
PARKS HIGHWAY TO
PALMER-WASILLA HIGHWAY

SIGNING, STRIPING, ILLUMINATION & INTERCONNECT "HR" 46+00 TO "HR" 50+50

DESIGNED BY	JHK
CHECKED BY	ST
DRAFTED BY	JHK
SCALE	1" = 200'
DATE	8/7/2026
TIME	11:19 AM

CROSSWALK POINT TABLE		
POINT	STATION	OFFSET
1	"HR" 52+90.37	35.96' LT
2	"HR" 52+92.62	26.88' RT
3	"HR" 53+02.20	40.92' LT
4	"HR" 53+04.93	35.26' RT
5	"HR" 53+05.91	43.51' LT
6	"HR" 53+12.34	43.89' RT
7	"HR" 53+16.16	55.51' LT
8	"HR" 53+18.31	55.89' RT
9	"BS" 70+27.87	55.57' LT
10	"BS" 70+28.18	55.89' RT
11	"BS" 70+29.17	45.51' LT
12	"BS" 70+31.24	43.89' RT
13	"BS" 70+32.11	37.69' LT
14	"BS" 70+42.94	23.71' LT
15	"BS" 70+47.59	29.63' RT

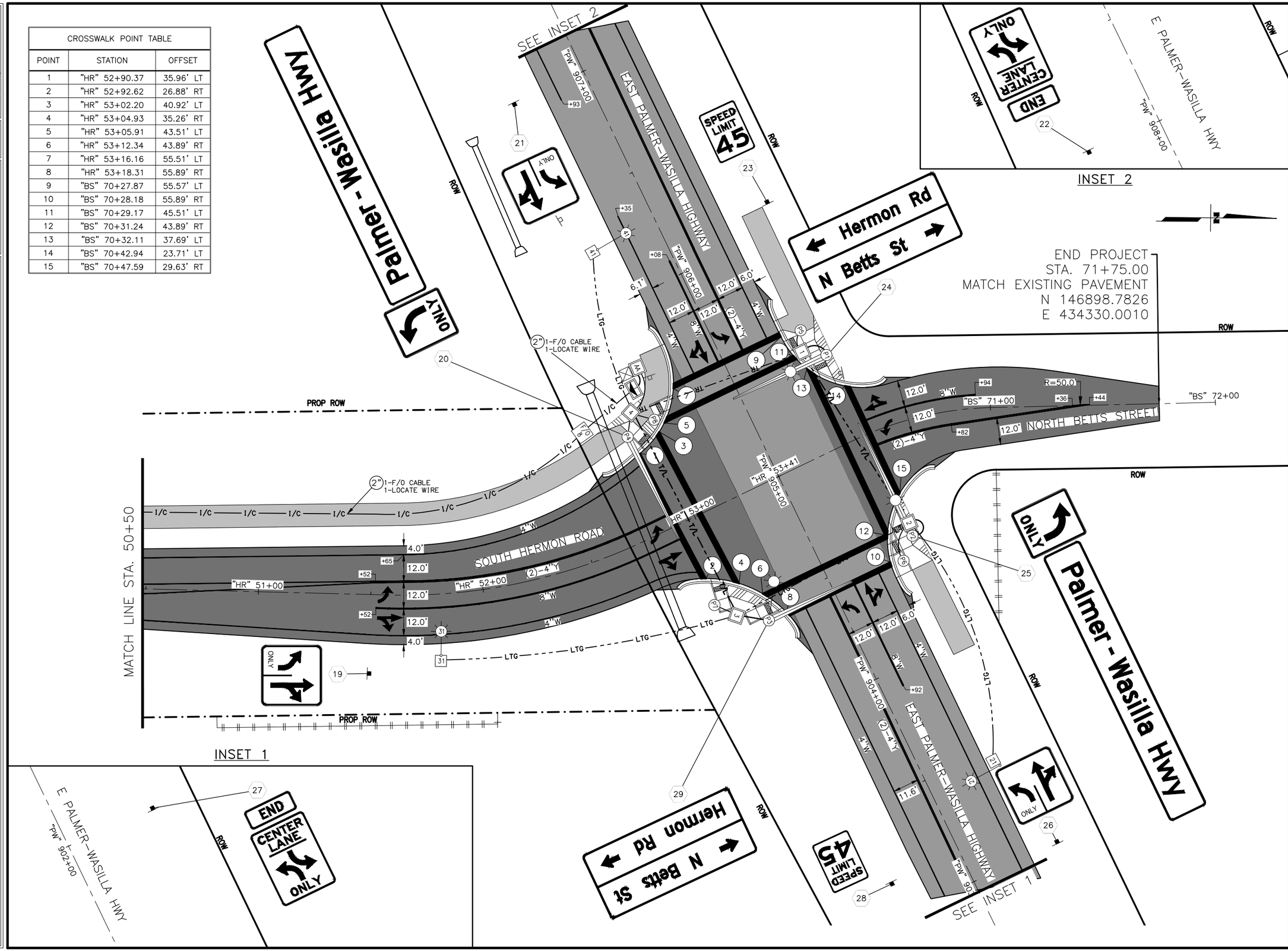

SHEET NO.	TOTAL SHEETS
HS12	HS17
STATE	YEAR
ALASKA	2027

PROJECT DESIGNATION

0001729/
CFHWY00799

NO.	REVISION
DATE	
NO.	REVISION
DATE	
NO.	REVISION
DATE	

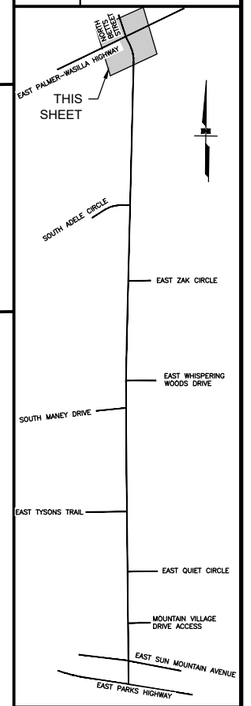

STATE OF ALASKA
PS&E REVIEW
AUGUST 2026
PROFESSIONAL ENGINEER

DOWL, LLC
5015 BUSINESS PARK BLVD
SUITE 4000
ANCHORAGE, AK 99503
(907) 562-2000
#AECL848 - AK

STATE OF ALASKA
DEPARTMENT OF TRANSPORTATION
AND PUBLIC FACILITIES

HERMON ROAD
PARKS HIGHWAY TO
PALMER-WASILLA HIGHWAY

SIGNING, STRIPING, ILLUMINATION & INTERCONNECT "HR" 50+50 TO EOP

DRAWING LOCATION
C:\DOWL_PW\0043398\00799_HS.DWG

DESIGNED BY	SRT
CHECKED BY	KLK
DRAFTED BY	JHK
SCALE	
DATE	8/7/2026
TIME	11:19 AM

DRAWING LOCATION
C:\DOWL_PW\0043398\00799_SIGN_SUMMARY.DWG

615.0001.0000 - STANDARD SIGN

SHEET NO.	SIGN NO.	STATION ALIGNMENT	CL REF	TYPE	LEGEND	SIZE (IN) WIDTH	SIZE (IN) HEIGHT	AREA (SQ FT)	SIGN FACES	POST NO., SIZE, & TYPE	FRAMED? YES	FRAMED? NO	REMARKS
HS3	1	"HR" 11+40	LT	D3-100	s Hermon Rd	36	8	2.00	E	1-3.0" T	X		
				D3-100	s Hermon Rd	36	8	2.00	W		X		
				D3-1 MOD	E Sun Mountain Ave	60	24	10.00	N		X		
				D3-1 MOD	E Sun Mountain Ave	60	24	10.00	S		X		
				R1-1	STOP	36	36	9.00	W		X		
				W4-4APR	TRAFFIC FROM RIGHT DOES NOT STOP	24	12	2.00	W			X	PLACE BELOW R1-1
HS3	2	"HR" 11+73	RT	D3-100	s Hermon Rd	36	8	2.00	E	1-3.0" T	X		
				D3-100	s Hermon Rd	36	8	2.00	W		X		
				D3-1 MOD	E Sun Mountain Ave	60	24	10.00	N		X		
				D3-1 MOD	E Sun Mountain Ave	60	24	10.00	S		X		
				R1-1	STOP	36	36	9.00	E		X		
				W4-4APL	TRAFFIC FROM LEFT DOES NOT STOP	24	12	2.00	E			X	PLACE BELOW R1-1
HS3	3	"HR" 12+03	LT	D3-1 MOD	E Sun Mountain Ave	60	24	10.00	S	1-3.0" T	X		
				D3-1 MOD	E Sun Mountain Ave	60	24	10.00	N		X		
				D3-100	s Hermon Rd	48	12	4.00	W		X		
				D3-100	s Hermon Rd	48	12	4.00	E		X		
				R1-1	STOP	36	36	9.00	N		X		
				W4-4BP	ONCOMING TRAFFIC DOES NOT STOP	24	12	2.00	N			X	PLACE BELOW R1-1
HS3	4	"HR" 12+70	RT	R2-1	SPEED LIMIT 35	24	30	5.00	S	1-3.0" T		X	
HS3	5	"HR" 13+41	RT	R3-9CP	BEGIN	24	12	2.00	S	1-3.0" T		X	PLACE ABOVE R3-9B
				R3-9B	CENTER LANE ONLY	24	36	6.00				X	
HS3	6	"HR" 13+92	LT	R3-9DP	END	24	12	2.00	N	1-3.0" T		X	PLACE ABOVE R3-9B
				R3-9B	CENTER LANE ONLY	24	36	6.00				X	

SUBTOTAL= 130.00 SF

NO.	DATE	REVISION

STATE	PROJECT DESIGNATION	YEAR	SHEET NO.	TOTAL SHEETS
ALASKA	0001729/CFHWY00799	2027	HS13	HS17

STATE OF ALASKA
PS&E REVIEW
AUGUST 2026
PROFESSIONAL ENGINEER

DOWL, LLC
5015 BUSINESS PARK BLVD
SUITE 4000
ANCHORAGE, AK 99503
(907) 562-2000
#AECL848 - AK

STATE OF ALASKA
DEPARTMENT OF TRANSPORTATION
AND PUBLIC FACILITIES

HERMON RD EXTENSION AND UPGRADE, PARKS HWY TO PALMER-WASILLA HWY

SIGN SUMMARY

DESIGNED BY SRT
CHECKED BY KLK
DRAFTED BY JHK
SCALE
DATE TIME 8/7/2026 11:19 AM
DRAWING LOCATION C:_DOWL_PW\D0433398\00799_SIGN_SUMMARY.DWG

615.0001.0000 - STANDARD SIGN

SHEET NO.	SIGN NO.	STATION ALIGNMENT	CL REF	TYPE	LEGEND	SIZE (IN) WIDTH	SIZE (IN) HEIGHT	AREA (SQ FT)	SIGN FACES	POST NO., SIZE, & TYPE	FRAMED? YES	FRAMED? NO	REMARKS
HS3	7	"HR" 14+34	RT	D3-100	S Hermon Rd	36	8	2.00	W	1-3.0" T	X		
				D3-100	S Hermon Rd	36	8	2.00	E		X		
				D3-100 MOD	E Mountain Village Dr	54	24	9.00	N		X		
				D3-100 MOD	E Mountain Village Dr	54	24	9.00	S		X		
				R1-1	STOP	36	36	9.00	E		X		
	8	NOT IN USE											
HS4	9	"HR" 17+75	RT	D3-100	S Hermon Rd	36	8	2.00	W	1-3.0" T	X		
				D3-100	S Hermon Rd	36	8	2.00	E		X		
				D3-100	E Quiet Cir	48	12	4.00	N		X		
				D3-100	E Quiet Cir	48	12	4.00	S		X		
				W14-1AR	DEAD END →	36	9	2.25	S		X		
				W14-1AL	← DEAD END	36	9	2.25	N		X		
				R1-1	STOP	36	36	9.00	E		X		
HS5	10	"HR" 21+12	LT	D3-100	S Hermon Rd	36	8	2.00	E	1-3.0" T	X		
				D3-100	S Hermon Rd	36	8	2.00	W		X		
				D3-100	E Tysons Trl	48	12	4.00	N		X		
				D3-100	E Tysons Trl	48	12	4.00	S		X		
				R1-1	STOP	36	36	9.00	W		X		
HS7	11	"HR" 28+20	LT	D3-100	S Hermon Rd	36	8	2.00	E	1-3.0" T	X		
				D3-100	S Hermon Rd	36	8	2.00	W		X		
				D3-100	S Maney Dr	48	12	4.00	N		X		
				D3-100	S Maney Dr	48	12	4.00	S		X		
				R1-1	STOP	36	36	9.00	W		X		

SUBTOTAL= 98.50 SF

NO.	DATE	REVISION

STATE	PROJECT DESIGNATION	YEAR	SHEET NO.	TOTAL SHEETS
ALASKA	0001729/CFHWY00799	2027	HS14	HS17

PS&E REVIEW AUGUST 2026

DOWL, LLC
5015 BUSINESS PARK BLVD
SUITE 4000
ANCHORAGE, AK 99503
(907) 562-2000
#AECL848 - AK

STATE OF ALASKA
DEPARTMENT OF TRANSPORTATION
AND PUBLIC FACILITIES

HERMON RD EXTENSION AND UPGRADE, PARKS HWY TO PALMER-WASILLA HWY

SIGN SUMMARY

DESIGNED BY SRT
CHECKED BY KLK
DRAFTED BY JHK
SCALE
DATE 8/7/2026 TIME 11:19 AM
DRAWING LOCATION C:\DOWL_PW\0043398\00799_SIGN_SUMMARY.DWG

615.0001.0000 - STANDARD SIGN

SHEET NO.	SIGN NO.	STATION ALIGNMENT	CL REF	TYPE	LEGEND	SIZE (IN) WIDTH	SIZE (IN) HEIGHT	AREA (SQ FT)	SIGN FACES	POST NO., SIZE, & TYPE	FRAMED? YES	FRAMED? NO	REMARKS
HS57	12	"HR" 28+66	RT	R3-9DP	END	24	12	2.00	S	1-3.0" T		X	PLACE ABOVE R3-9B
				R3-9B	CENTER LANE ONLY	24	36	6.00				X	
HS7	13	"HR" 29+19	LT	R3-9CP	BEGIN	24	12	2.00	N	1-3.0" T		X	PLACE ABOVE R3-9B
				R3-9B	CENTER LANE ONLY	24	36	6.00				X	
HS7	14	"HR" 30+57	RT	D3-100	S Hermon Rd	36	8	2.00	W	1-3.0" T	X		
				D3-100	S Hermon Rd	36	8	2.00	E		X		
				D3-1 MOD	E Whispering Woods Dr	60	24	10.00	N		X		
				D3-1 MOD	E Whispering Woods Dr	60	24	10.00	S		X		
				R1-1	STOP	36	36	9.00	E		X		
HS9	15	"HR" 37+23	RT	D3-100	S Hermon Rd	36	8	2.00	W	1-3.0" T	X		
				D3-100	S Hermon Rd	36	8	2.00	E		X		
				D3-100	E Zak Cir	42	12	3.50	N		X		
				D3-100	E Zak Cir	42	12	3.50	N		X		
				R1-1	STOP	36	36	9.00	E		X		
HS9	16	"HR" 38+18	RT	R2-1	SPEED LIMIT 35	24	30	5.00	S	1-3.0" T		X	
HS10	17	"HR" 41+77	LT	D3-100	S Hermon Rd	36	8	2.00	E	1-3.0" T	X		
				D3-100	S Hermon Rd	36	8	2.00	W		X		
				D3-100	S Adele Cir	48	12	4.00	N		X		
				D3-100	S Adele Cir	48	12	4.00	S		X		
				R1-1	STOP	36	36	9.00	W		X		
HS11	18	"HR" 49+46	LT	R2-1	SPEED LIMIT 35	24	30	5.00	N	1-3.0" T		X	
HS12	19	"HR" 51+50	RT	R3-8L	ONLY	30	30	6.25	S	1-3.0" T	X		
SUBTOTAL= 106.25 SF													

NO.	DATE	REVISION

STATE	PROJECT DESIGNATION	YEAR	SHEET NO.	TOTAL SHEETS
ALASKA	0001729/CFHWY00799	2027	HS15	HS17

STATE OF ALASKA
PROFESSIONAL ENGINEER
PS&E REVIEW
AUGUST 2026

DOWL, LLC
5015 BUSINESS PARK BLVD
SUITE 4000
ANCHORAGE, AK 99503
(907) 562-2000
#AECL848 – AK

STATE OF ALASKA
DEPARTMENT OF TRANSPORTATION
AND PUBLIC FACILITIES

HERMON RD EXTENSION AND UPGRADE, PARKS HWY TO PALMER–WASILLA HWY

SIGN SUMMARY

DESIGNED BY	SRT
CHECKED BY	KLK
DRAFTED BY	JHK
SCALE	
DATE	8/7/2026
TIME	11:19 AM

DRAWING LOCATION
C:\DOWL_PW\0043398\00799_SIGN_SUMMARY.DWG

615.0001.0000 - STANDARD SIGN

SHEET NO.	SIGN NO.	STATION ALIGNMENT	CL REF	TYPE	LEGEND	SIZE (IN) WIDTH	SIZE (IN) HEIGHT	AREA (SQ FT)	SIGN FACES	POST NO., SIZE, & TYPE	FRAMED? YES	FRAMED? NO	REMARKS
HS12	20	"HR" 52+99	LT	R3-5L	ONLY	30	36	7.50	NW	N/A		X	MOUNT TO POLE P4
				D3-1	Palmer - Wasilla Hwy	174	24	29.00			X		
HS12	21	"HR" 53+07	LT	R3-8L/SR	ONLY	30	30	6.25	SW	1-3.0" T	X		
HS12	22	"PW" 908+01	LT	R3-9DP	END	24	12	2.00	SW	1-3.0" T		X	PLACE ABOVE R3-9B
				R3-9B	CENTER LANE ONLY	24	36	6.00				X	
HS12	23	"PW" 906+12	RT	R2-1	SPEED LIMIT 45	24	30	5.00	NE	1-3.0" T		X	
HS12	24	"PW" 905+39	RT	D3-102	← Hermen Rd / N Betts St →	96	42	28.00	NE	N/A	X		MOUNT TO POLE P1
HS12	25	"PW" 904+51	RT	R3-5L	ONLY	30	36	7.50	SW	N/A		X	MOUNT TO POLE P2
				D3-1	Palmer - Wasilla Hwy	174	24	29.00			X		
HS12	26	"PW" 903+00	RT	R3-8L/SR	ONLY	30	30	6.25	NE	1-3.0" T	X		
HS12	27	"PW" 901+99	RT	R3-9DP	END	24	12	2.00	NE	1-3.0" T		X	PLACE ABOVE R3-9B
				R3-9B	CENTER LANE ONLY	24	36	6.00				X	
HS12	28	"PW" 903+15	LT	R2-1	SPEED LIMIT 45	24	30	5.00	SW	1-3.0" T		X	
HS12	29	"HR" 52+93	RT	D3-102	← N Betts St / Hermen Rd →	96	42	28.00	SW	N/A	X		MOUNT TO POLE P3
HS6	30	"HR" 27+68	LT	R5-103P	PATHWAY	18	6	0.75	N	1-3.0" T		X	PLACE ABOVE R5-103
				R5-103	NO MOTOR VEHICLES	18	24	3.00				X	
HS7	31	"HR" 29+07	LT	R5-103P	PATHWAY	18	6	0.75	S	1-3.0" T		X	PLACE ABOVE R5-103
				R5-103	NO MOTOR VEHICLES	18	24	3.00				X	
HS9	32	"HR" 41+36	LT	R5-103P	PATHWAY	18	6	0.75	N	1-3.0" T		X	PLACE ABOVE R5-103
				R5-103	NO MOTOR VEHICLES	18	24	3.00				X	
HS10	33	"HR" 42+70	LT	R5-103P	PATHWAY	18	6	0.75	S	1-3.0" T		X	PLACE ABOVE R5-103
				R5-103	NO MOTOR VEHICLES	18	24	3.00				X	
SUBTOTAL= 182.50 SF													
SIGNING AND STRIPING SHEETS (HS1-HS10) SUBTOTAL= 517.25 SF													

NO.	DATE	REVISION

STATE	PROJECT DESIGNATION	YEAR	SHEET NO.	TOTAL SHEETS
ALASKA	0001729/CFHWY00799	2027	HS16	HS17

STATE OF ALASKA
PROFESSIONAL ENGINEER
PS&E REVIEW
AUGUST 2026

DOWL, LLC
5015 BUSINESS PARK BLVD
SUITE 4000
ANCHORAGE, AK 99503
(907) 562-2000
#AECL848 - AK

STATE OF ALASKA
DEPARTMENT OF TRANSPORTATION
AND PUBLIC FACILITIES

HERMON RD EXTENSION AND UPGRADE, PARKS HWY TO PALMER-WASILLA HWY

SIGN SUMMARY

DESIGNED BY	SRT
CHECKED BY	KLK
DRAFTED BY	JHK

SCALE

DATE 8/7/2026 TIME 11:19 AM

DRAWING LOCATION
C:\DOWL_PW\D0433398\00799_SIGN_SUMMARY.DWG

615.0006.0000 - SALVAGE SIGN

STATION ALIGNMENT	CL REF	LEGEND	REMARKS
"HR" 11+40	LT	STOP	
		3-WAY	
		TRAFFIC FROM RIGHT DOES NOT STOP	
"HR" 11+73	RT	STOP	
		3-WAY	
		TRAFFIC FROM LEFT DOES NOT STOP	
"HR" 11+95	LT	STOP	
		3-WAY	
"HR" 17+34	RT	NOT A THROUGH STREET	
"HR" 17+77	RT	E QUIET CIR	
		STOP	
"HR" 19+39	RT	SPEED LIMIT 25	
"HR" 21+27	LT	STOP	
"HR" 28+29	LT	S MANEY DR	
		STOP	
"HR" 29+70	RT	E WHISPERING WOODS DR	
		STOP	
"HR" 30+48	RT	STOP	
"HR" 30+53	LT	NOT A THROUGH STREET	
		STOP	
"HR" 44+11	RT	S ADELE CIR	
"HR" 53+03	LT	N TRENT CIR	
		STOP	
"PW" 905+64	LT	SPEED LIMIT 45	
"BS" 70+43	LT	PALMER-WASILLA HWY	
		N BETTS ST	
		STOP	

NO.	DATE	REVISION

STATE	PROJECT DESIGNATION	YEAR	SHEET NO.	TOTAL SHEETS
ALASKA	0001729/CFHWY00799	2027	HS17	HS17

STATE OF ALASKA
PROFESSIONAL ENGINEER
PS&E REVIEW
AUGUST 2026

DOWL, LLC
5015 BUSINESS PARK BLVD
SUITE 4000
ANCHORAGE, AK 99503
(907) 562-2000
#AECL848 - AK

STATE OF ALASKA
DEPARTMENT OF TRANSPORTATION
AND PUBLIC FACILITIES

HERMON RD EXTENSION AND UPGRADE, PARKS HWY TO PALMER-WASILLA HWY

SIGN SUMMARY

NO.	DATE	REVISION

STATE	PROJECT DESIGNATION	YEAR	SHEET NO.	TOTAL SHEETS
ALASKA	0001729/CFHWY00799	2027	Q1	Q1

DESIGNED BY SRT
CHECKED BY KLK
DRAFTED BY JHK

SCALE 1" = 20'

DATE TIME 8/7/2026 11:19 AM

DRAWING LOCATION
C:\DOWL_PW\0043398\00799_Q1.DWG

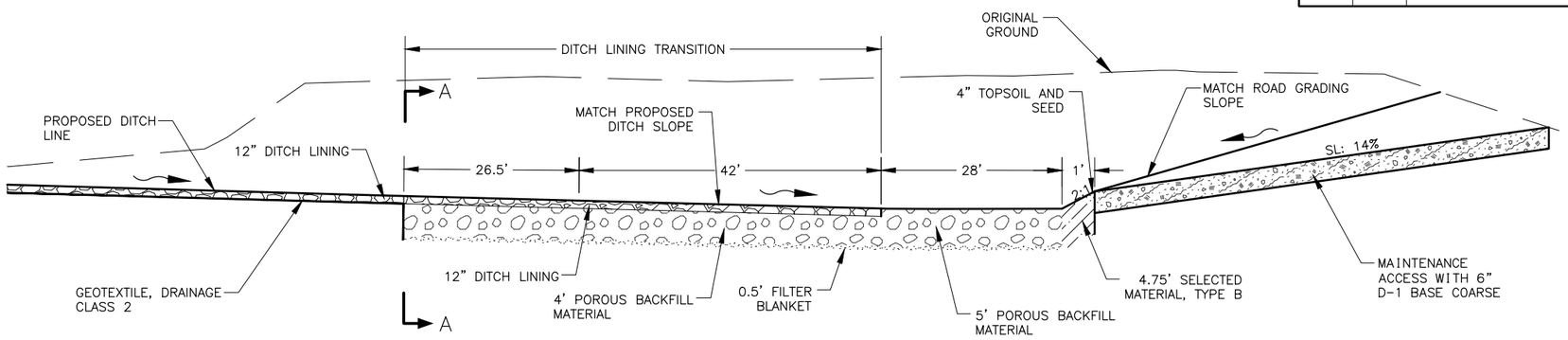

INFILTRATION FACILITY PROFILE

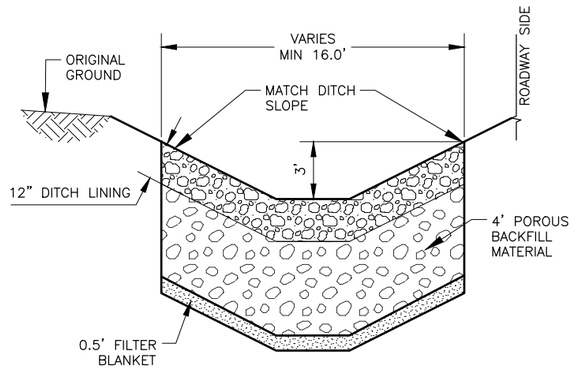

SECTION A–A

DITCH LINING TRANSITIONAL SECTION

N.T.S.
REFER TO E–SHEETS FOR TYPICAL DITCH SECTION

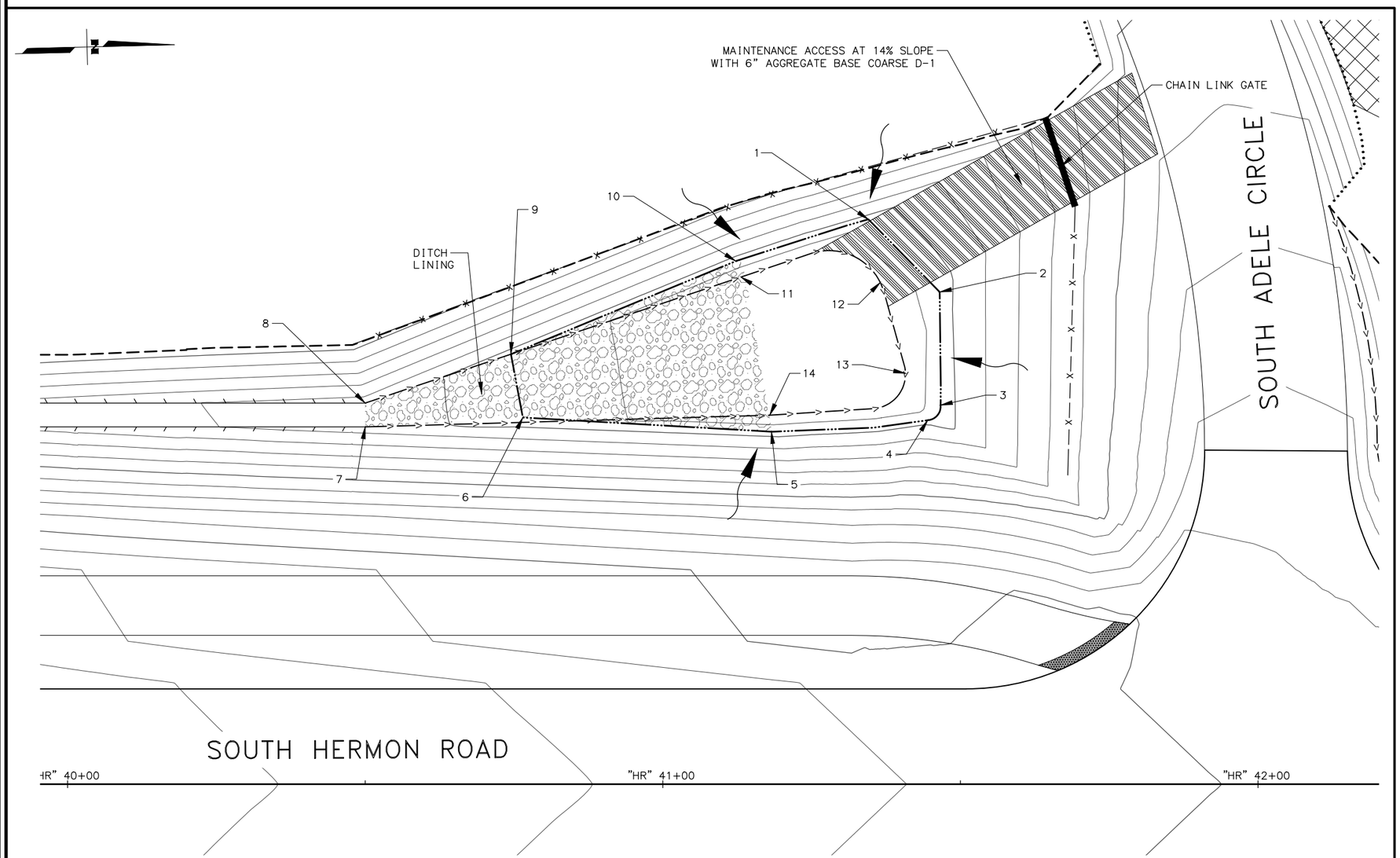

POINT NO.	STATION	OFFSET	ELEVATION
1	41+35	94.84 LT	334.61
2	41+47	82.66 LT	334.61
3	41+47	63.48 LT	334.61
4	41+45	61.21 LT	334.61
5	41+18	59.20LT	334.61
6	40+76	51.67 LT	334.61
7	40+50	60.00 LT	335.48
8	40+50	64.00 LT	335.47
9	40+74	72.21 LT	334.61
10	41+14	88.20 LT	334.61
11	41+14	85.43 LT	333.21
12	41+37	83.06 LT	333.21
13	41+41	67.96 LT	333.21
14	41+18	61.97 LT	333.21

STATE OF ALASKA
PROFESSIONAL ENGINEER
PS&E REVIEW
AUGUST 2026

DOWL, LLC
5015 BUSINESS PARK BLVD
SUITE 4000
ANCHORAGE, AK 99503
(907) 562-2000
#AECL848 – AK

STATE OF ALASKA
DEPARTMENT OF TRANSPORTATION
AND PUBLIC FACILITIES

HERMON RD EXTENSION AND UPGRADE, PARKS HWY TO PALMER–WASILLA HWY

RETENTION BASIN DETAILS

PROJECT DESIGNATION	SHEET NUMBER	TOTAL SHEETS
CFHWY00799/0001729	R1	R11

STATE OF ALASKA
DEPARTMENT OF TRANSPORTATION AND PUBLIC FACILITIES

RIGHT - OF - WAY MAP

ALASKA PROJECT

HERMON ROAD EXTENSION AND UPGRADE: PARKS HWY TO PALMER-WASILLA HWY

CFHWY00799/0001729

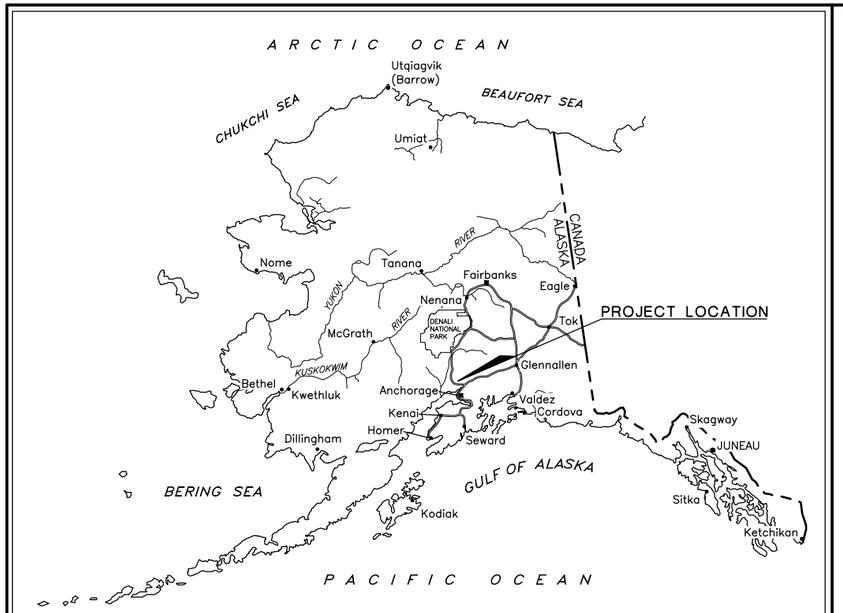

ALASKA STATE MAP

MAPS PREPARED BY:
LOUNSBURY & ASSOCIATES, INC.
3230 C STREET
SUITE 201
ANCHORAGE, AK 99503
(907) 272-5451
CERT. OF AUTH. NO. AECC391

SPECIAL GENERAL NOTE

SUBDIVISION NAMES, PLAT NUMBERS AND DEPICTIONS OF PROPERTIES ADJACENT TO THE RIGHT-OF-WAY SHOWN HEREON WERE GENERATED AT THE TIME OF INITIAL PLAN DEVELOPMENT. THIS PLAN DOES NOT NECESSARILY REFLECT THE CURRENT STATUS AT THE TIME OF THE RECORDING OF THIS DOCUMENT.

RIGHT-OF-WAY PLAN NOTE

THESE PLANS MAY BE USED FOR THE ESTABLISHMENT OF RIGHT-OF-WAY LIMITS ONLY. THESE DRAWINGS SHOULD NOT BE USED AS A BASIS FOR ESTABLISHING ADJOINING PROPERTY LINES AND CORNERS.

PRELIMINARY

DRAFT 4/27/2026

ACQUISITION DATES: APRIL 2026 - OCTOBER 2026

CONSTRUCTION DATES: APRIL 2027 - SEPTEMBER 2029

PROJECT LENGTH 0.8 MILES

T17N R1W S. M.

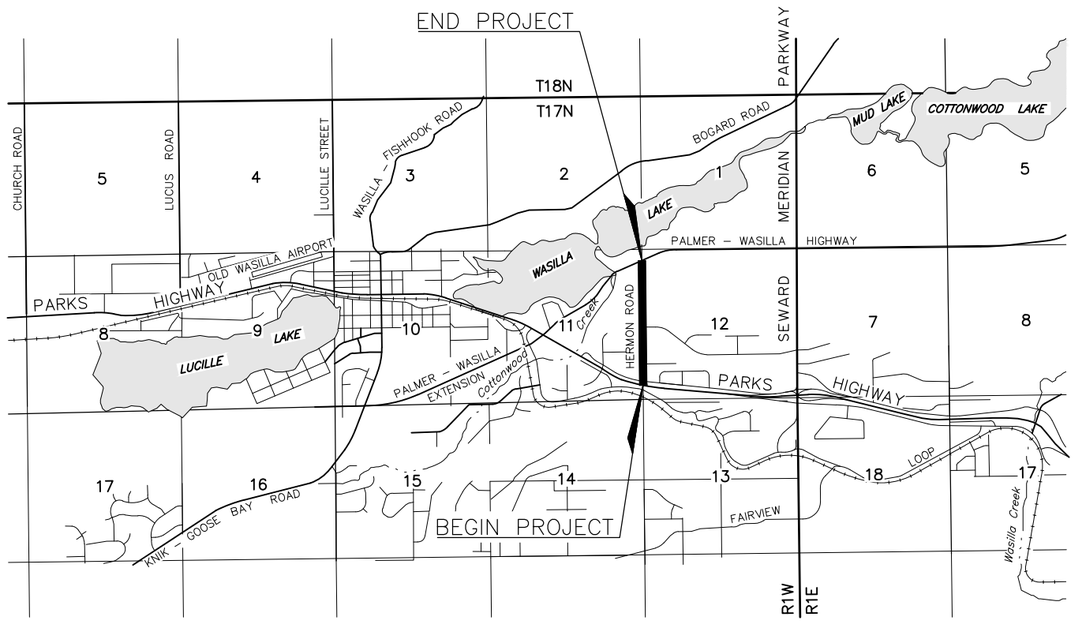

SITE MAP

U.S.G.S. QUADRANGLE ANCHORAGE (C-7) ALASKA

CERTIFICATE OF APPROVAL BY THE PLATTING AUTHORITY

I HEREBY CERTIFY THAT THE RIGHT OF WAY PLAT SHOWN HEREON HAS BEEN FOUND TO COMPLY WITH THE REGULATIONS OF THE MATANUSKA-SUSITNA BOROUGH PLATTING AUTHORITY AND THAT SAID PLAT HAS BEEN APPROVED BY THE PLATTING AUTHORITY BY PLAT RESOLUTION NO. _____, DATED _____, AND THAT THE PLAT SHOWN HEREON HAS BEEN APPROVED FOR RECORDING IN THE PALMER RECORDING DISTRICT, THIRD JUDICIAL DISTRICT, STATE OF ALASKA, IN WHICH THE PLAT IS LOCATED.

ATTEST:

PLATTING CLERK

PLANNING & LAND USE DIRECTOR
MATANUSKA-SUSITNA BOROUGH
PLATTING AUTHORITY

CONSULTANT LOCATIONS SURVEYOR'S CERTIFICATE

I HEREBY CERTIFY THAT I AM A PROFESSIONAL LAND SURVEYOR REGISTERED IN THE STATE OF ALASKA AND THAT ALL RIGHT-OF-WAY CENTERLINE MONUMENT LOCATIONS HAVE BEEN ESTABLISHED AS INDICATED ON THE RIGHT-OF-WAY PLANS, ALL EXISTING FOUND SUBDIVISION MONUMENTS, PROPERTY CORNERS AND SECTION LINE MONUMENTATION AS INDICATED ON THE RIGHT-OF-WAY PLANS HAVE BEEN REFERENCED TO PROJECT SURVEY CONTROLS BY ME OR UNDER MY SUPERVISION.

DATE

REGISTRATION NUMBER

JOSHUA W. VARNEY



CONSULTANT LOCATIONS SURVEYOR'S CERTIFICATE

CONSULTANT RIGHT-OF-WAY SURVEYOR'S CERTIFICATE

I HEREBY CERTIFY THAT I AM A PROFESSIONAL LAND SURVEYOR REGISTERED IN THE STATE OF ALASKA AND THAT THIS PLAT WAS MADE BY ME OR UNDER MY SUPERVISION. THIS PLAT WAS BASED UPON THE MONUMENTS RECOVERED DURING THE CONSULTANT'S LOCATIONS SURVEY FOR THIS PROJECT.

DATE

REGISTRATION NUMBER

MARSHALL L. HETLET

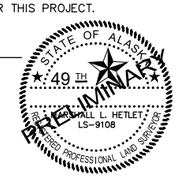

CONSULTANT RIGHT-OF-WAY SURVEYOR'S CERTIFICATE

DEPARTMENT OF TRANSPORTATION AND PUBLIC FACILITIES

APPROVED_____, 20____
Date

REGIONAL CHIEF RIGHT-OF-WAY AGENT

THIS SURVEY DOES NOT CONSTITUTE A SUBDIVISION AS DEFINED BY A.S. 40.15.900(5).

WITHIN A PORTION OF SECTIONS: 11 & 12, T17N R1W, SEWARD MERIDIAN

RECORD OF SURVEY - PALMER RECORDING DISTRICT

STATE BUSINESS - NO FEE

PROJECT DESIGNATION	SHEET NUMBER	TOTAL SHEETS
CFHWY00799/0001729	R2	R11

RIGHT OF WAY

	RECOVERED	SET THIS PROJECT
FED. GOV'T SECTION CORNER	SEC COR	
FED. GOV'T 1/4 SECTION CORNER	1/4 COR	
FED. GOV'T 1/16 SECTION CORNER	1/16 COR	
FED. GOV'T SURVEY MONUMENT		
GOV'T CONTROL STA.		
PRIMARY MONUMENT (BRASS/AL CAP)		
MISC. SECONDARY CORNER		
PRIMARY CENTERLINE MOMUMENT		
SECONDARY CENTERLINE MONUMENT		
CONTROL POINT	CP	
TOWNSHIP & RANGE LINE	T. 13 N. / T. 12 N.	R. 3 W. / R. 2 W.
INTERNATIONAL BOUNDARY LINE	ALASKA / CANADA	
SECTION LINE		
1/4 SECTION LINE		
1/16 SECTION LINE		
CORPORATE or CITY LIMITS		
EXISTING RIGHT-OF-WAY		
RIGHT-OF-WAY OR EASEMENT REQUIRED		
STATION EQUATION	STA. 14+33.22 BK. = STA. 16+90.17 AHD.	
PROJECT CENTERLINE		
EXISTING CENTERLINE		
RAILROAD CENTERLINE		
PROJECT RIGHT-OF-WAY LINE		
EXISTING PROPERTY LINE		
CONTROLLED ACCESS LINE	C/A	
TEMPORARY CONSTRUCTION PERMIT		
TEMPORARY CONSTRUCTION EASEMENT		
EXISTING RIGHT-OF-WAY EASEMENT		

SECTION LINE EASEMENT AND SECTION LINE-CENTERLINE INTERSECTION

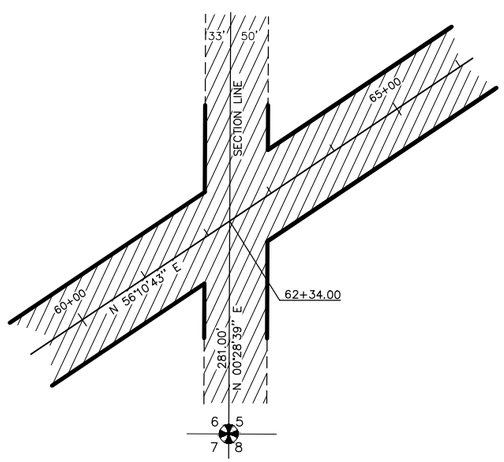

RIGHT OF WAY

EXISTING UTILITY EASEMENT

PROPOSED UTILITY EASEMENT

UTILITIES

	EXISTING	PROPOSED
PIPELINES:		
STORM DRAIN	SD	
MANHOLE STORM DRAIN	SD	SD
CURB INLET CATCH BASIN		
FIELD INLET CATCH BASIN	FI	FI
PIPE CULVERT w/ END SECTION		
CLEANOUT	CO	CO
SANITARY SEWER	SS	SS
MANHOLE SANITARY SEWER	SS	SS
SEPTIC VENTS	S	
WATER	W	W
FIRE HYDRANT		
WELL	W	
VALVE OR RISER		
WATER SERVICE CONNECT		
NATURAL GAS	G	G
OIL OR GASOLINE PIPELINE	O	O
ELECTRIC (OVERHEAD)	OE	
ELECTRIC (DIRECT BURY)	UE	
ELECTRIC (OVERHEAD)	OE&OT	
UTILITY POLE		
UTILITY POLE WITH LUMINAIRE		
GUY POLE		
GUY WIRE ANCHOR		
TRANSMISSION TOWER [WOOD]		
TRANSMISSION TOWER [STEEL]		
ELECTRICAL PEDESTAL	E	
ELECTRICAL TRANSFORMER	E	
ELECTRIC METER		
ELECTRICAL OUTLET		
ELECTRIC MANHOLE	E	
TELEPHONE (OVERHEAD)	OT	
TELEPHONE (DIRECT BURY)	UT	
TELEPHONE (DIRECT BURY)	UTV	
TELEPHONE PEDESTAL	T	
TELEPHONE MANHOLE	T	
FIBER OPTIC	FO	
FIBER OPTIC MANHOLE	FO	
CABLE TV (OVERHEAD)	OTV	
CABLE TV (DIRECT BURY)	UTV	
CABLE T.V. PEDESTAL	V	
SATELLITE DISH		
U.G. DUCT (E, T, FO)		

UTILITIES

	EXISTING	PROPOSED
TYPE IA JUNCTION BOX		
TYPE II JUNCTION BOX		
TYPE III JUNCTION BOX		
TYPE IV JUNCTION BOX TRAFFIC CONTROLLER		
ELECTROLIER		
HIGHTOWER		
SIGNAL POLE WITH MAST		
PEDESTRIAN PUSH BUTTON		
RURAL BEACON		
SCHOOL ZONE BEACON		

EXISTING TOPOGRAPHY

CONIFER TREE OR TREES	
DECIDUOUS TREE OR TREES	
SHRUB OR SHRUBS	
WETLANDS	
CREEK	
RIVER	
LAKE / POND	LAKE / POND

EXISTING/PROPOSED

DRAINAGE FLOW	
CONTOURS - MAJOR	515
CONTOURS - MINOR	

MISCELLANEOUS

	EXISTING	PROPOSED
BUILDING		
FOUNDATION		
TANKS ABOVE GROUND		
TANKS UNDERGROUND	U	
PLANTER	P	
PRIVATE SIGN		
POST/BOLLARDS		
MAILBOX	MB	MB
TRAFFIC SIGN		
TRAFFIC SIGN POST #		##
VENT		
GAS PUMP	GP	
LANDSCAPE LIGHT		

ROADWAY

	EXISTING	PROPOSED
ROADWAY OBLITERATION		
LIMIT OF CUT SLOPE		
LIMIT OF FILL SLOPE		
EDGE OF PAVEMENT		
CONCRETE CURB		
CONCRETE CURB & GUTTER		
SIDEWALK		
DRIVEWAY APPROACH		
GRAVEL EDGE		
PATH / TRAIL		
BRIDGE		
TUNNEL		
NOISE BARRIER	====X====X	====X====X
FENCE	X	X
STONE FENCE		
RETAINING WALL		
HEAD & WINGWALLS		
GUARDRAIL		
END SECTION		
PARALLEL GUARDRAIL SECTION		
SPECIAL DITCH		
BOTTOM OF DITCH		
RIPRAP		
BOULDER OR BOULDERS		

DRAFT 4/9/2026

PALMER RECORDING DISTRICT

STATE OF ALASKA
DEPARTMENT OF TRANSPORTATION AND PUBLIC FACILITIES

RIGHT-OF-WAY MAP
ALASKA PROJECT

CFHWY00799 / 0001729

HERMON ROAD EXTENSION AND UPGRADE:
PARKS HWY TO PALMER-WASILLA HWY

DRAWN MLH	DATE 4/09/2026	SCALE N/A	
CHECKED JWV/KMG	DATE	SHEET 2	OF 11

DRAFT 4/9/2026

PROJECT DESIGNATION	SHEET NUMBER	TOTAL SHEETS
CFHWY00799/0001729	R3	R11

T17N R1W S.M. SEC. 11 & 12



0 100 200 400
SCALE IN FEET

PALMER RECORDING DISTRICT

DATE	REVISIONS	BY

STATE OF ALASKA
DEPARTMENT OF TRANSPORTATION AND PUBLIC FACILITIES

RIGHT-OF-WAY MAP
ALASKA PROJECT

CFHWY00799 / 0001729

HERMON ROAD EXTENSION AND UPGRADE:
PARKS HWY TO PALMER-WASILLA HWY

DRAWN	MLH	DATE	4/09/2026	SCALE	1"=200'
CHECKED	JWV/KMG	DATE		SHEET	3 OF 11

STATE OF ALASKA
REGISTERED PROFESSIONAL LAND SURVEYOR
MARSHALL L. HETLET
LS-9108

CONSULTANT RIGHT-OF-WAY SURVEYOR'S CERTIFICATE

MAPS PREPARED BY:
LOUNSBURY & ASSOCIATES, INC.
3230 C STREET, SUITE 201
ANCHORAGE, ALASKA 99503
(907) 272-5451
CERT. OF AUTH. NO. AECC391

DRAFT 4/9/2026

PROJECT DESIGNATION	SHEET NUMBER	TOTAL SHEETS
CFHWY00799/0001729	R4	R11

SEE DETAIL-4E FOR S 1/16 COR POSITION

STA: 17+29.00

MATCHLINE SHEET 5

SE 1/16 CORNER

SEE NOTE 10, SHEET 9, FOR COR INFO

N 89°26'30" E 1314.48' SE 1/16 TO S 1/16 COR

20' UTIL ESMT

24.37'

17+28.99

47.40' LT

RIGHT-OF-WAY LINE

SLOPE LIMITS

48.00'

S 1/16 COR

SEE DETAIL-4F

N 89°18'42" E 227.31'

20' UTIL ESMT

N 89°18'42" E 2637.66' S 1/16 TO C-S 1/16 COR

C-S 1/16 CORNER

10' SCREENING ESMT

15' MTA ESMT (BK745 P785)

MOUNTAIN VILLAGE PLAZA SUBD (78-144) BLOCK 3 2A

MOUNTAIN VILLAGE PLAZA SUBD (84-61) BLOCK 3 3A

N 00°39'46" W 200.04'

15' UTIL ESMT

199.84'

N 00°34'31" W 169.90'

30'

3' PUBLIC USE ESMT

SLOPE LIMITS

257.56'

S 89°21'19" W 260.56'

10' X 16.02' UTIL ESMT

N 00°34'31" W 305.00'

33' SEC LINE ESMT

SECTION 11

SECTION 12

5A

T17N R1W S. M. SEC. 11 & 12

OVERLOOK BUSINESS PARK (76-46) BLOCK 1 4

OVERLOOK BUSINESS PARK SUBD (2022-101) BLOCK 1 5B

OVERLOOK BUSINESS PARK (76-46)

S 00°34'31" E 516.53'

15+00

516.52'

S 00°34'31" E 522.51'

S. HERMON ROAD

SEE DETAIL-4D

1C

MOUNTAIN VILLAGE PLAZA SUBD (2005-32) BLOCK 3 3B-1

30' DRIVEWAY ESMT

10' DRAINAGE ESMT

SUN PLAZA SUBD (2004-190) 1A

15' UTIL ESMT

BLOCK 1 6

N 12°54'27" E 529.86'

MEA ESMT (BK1141 P570)

200.76'

MOUNTAIN VILLAGE PLAZA SUBD (86-76) BLOCK 3

N 89°14'53" E 260.81' 257.81'

PROJECT CENTERLINE

145.39'

RIGHT-OF-WAY LINE

156.53'

1B

N 00°34'31" W 1721.79' (BOP TO PC)

N 00°32'54" W

N 00°34'31" W 1475.39'

UTIL ESMT (2002-005506)

UTIL ESMT (2003-008707)

N 89°25'29" E 33.00'

Δ=17°10'31" R=2657.47' L=796.62'

84.48'

S 79°53'46" E 67.29'

S 78°47'19" E 53.79'

Δ=9°55'31" R=1312.33' L=227.33'

76.31'

N 83°35'00" W

N 84°00'36" W 134.80'

54.22'

SEE DETAIL-4B

SEE DETAIL-4C

SEE DETAIL-4A

2

11+60.89

115.54' RT

R.O.W. PER NH-0A4-1(12) PLAT 2010-53

N 00°39'46" W 231.35'

25' RIGHT OF WAY ESMT (BK1112 P737)

25' COMMON ACCESS ESMT

MOUNTAIN VILLAGE PLAZA SUBD (2005-32) BLOCK 3 3C-1

10' x 25' UTIL ESMT

E MOUNTAIN VILLAGE DR

N 00°41'51" W 140.22'

N 00°41'51" W 289.86'

25' 25'

Δ=41°21'12" R=200.52' L=144.73'

L=77.84' R=50.00'

L=84.21' R=50.00'

UTIL ESMT (2002-006314)

N 81°27'50" W 178.75'

E SUN MOUNTAIN AVE

N 78°29'45" W 256.73'

255.70' TO SECTION LINE

UTIL ESMT (2002-022973)

N 84°10'13" W 203.57'

Δ=5°37'04" R=1640.42' L=160.84'

166.59'

16.4' UTIL ESMT (2003-007491)

S 84°10'13" E

N 84°06'49" W 1215.33'

R.O.W. PER NH-0A4-1(12) PLAT 2010-53

E PARKS HIGHWAY

BEGINNING OF PROJECT

STA: 10+00.00

SECTION CORNER 11 12 14 13

NOTE: SEE SHEET 8 FOR DETAILS.

NOTE: STATIONS AND OFFSETS SHOWN HEREIN ARE TO COMPUTED RIGHT OF WAY LOCATIONS. SEE MONUMENT SUMMARY SHEETS FOR POSITIONS OF RECOVERED CORNER MONUMENTS.

0 25 50 100

SCALE IN FEET

PALMER RECORDING DISTRICT

PARCEL NUMBER	INTEREST ACQUIRED	OWNER	LARGER PARCEL	TAKE INCLUDING EXISTING EASEMENT	NET TAKE	REMAINDER	RECORDED DOCUMENT NUMBER
3	FEE	Warren W Wedekind Jr Revocable Trust	52,065 S.F.	792 S.F.	192 S.F.	51,273 S.F.	
2	FEE	Hunter Plaza, LLC	54,251 S.F.	907 S.F.	403 S.F.	53,344 S.F.	
1	FEE	BP Investment Group, LLC	71,348 S.F.	24,055 S.F.	7009 S.F.	47,293 S.F.	

PARCEL INFORMATION

STATE OF ALASKA
REGISTERED PROFESSIONAL LAND SURVEYOR
MARSHALL L. HETLET
LS-9108

CONSULTANT RIGHT-OF-WAY SURVEYOR'S CERTIFICATE

MAPS PREPARED BY:
LOUNSBURY & ASSOCIATES, INC.
3230 C STREET, SUITE 201,
ANCHORAGE, ALASKA 99503
(907) 272-5451
CERT. OF AUTH. NO. AECC391

DATE	REVISIONS	BY

STATE OF ALASKA
DEPARTMENT OF TRANSPORTATION AND PUBLIC FACILITIES

RIGHT-OF-WAY MAP
ALASKA PROJECT

CFHWY00799 / 0001729

HERMON ROAD EXTENSION AND UPGRADE:
PARKS HWY TO PALMER-WASILLA HWY

DRAWN MLH	DATE 4/09/2026	SCALE 1"=50'	
CHECKED JWV/KMG	DATE	SHEET 4	OF 11

DRAFT 4/9/2026

PROJECT DESIGNATION	SHEET NUMBER	TOTAL SHEETS
CFHWY00799/0001729	R5	R11

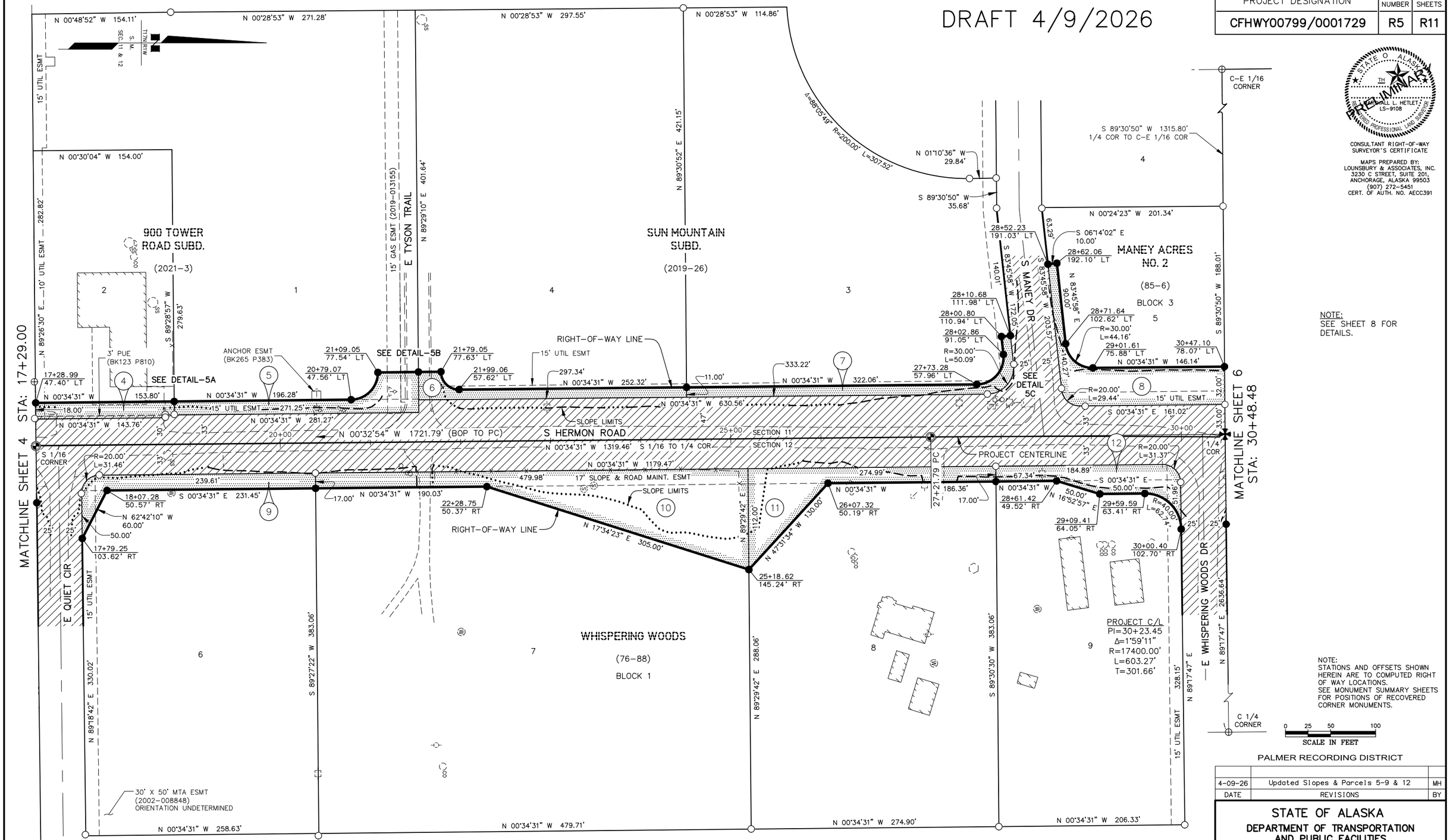

NOTE:
SEE SHEET 8 FOR DETAILS.

NOTE:
STATIONS AND OFFSETS SHOWN HEREIN ARE TO COMPUTED RIGHT OF WAY LOCATIONS.
SEE MONUMENT SUMMARY SHEETS FOR POSITIONS OF RECOVERED CORNER MONUMENTS.

STATE OF ALASKA
MARSHALL L. HETLET
LS-9108
REGISTERED PROFESSIONAL LAND SURVEYOR

CONSULTANT RIGHT-OF-WAY SURVEYOR'S CERTIFICATE

MAPS PREPARED BY:
LOUNSBURY & ASSOCIATES, INC.
3230 C STREET, SUITE 201,
ANCHORAGE, ALASKA 99503
(907) 272-5451
CERT. OF AUTH. NO. AECC391

PARCEL INFORMATION

PARCEL NUMBER	INTEREST ACQUIRED	OWNER	LARGER PARCEL	TAKE INCLUDING EXISTING EASEMENT	NET TAKE	REMAINDER	RECORDED DOCUMENT NUMBER
8	FEE	City of Wasilla	41,840 S.F.	8864 S.F.		32,976 S.F.	
7	FEE	SM3 Development, LLC	115,388 S.F.	4560 S.F.		110,828 S.F.	
6	FEE	SM3 Development, LLC	128,615 S.F.	3857 S.F.		124,758 S.F.	
5	FEE	SM3 Development, LLC	144,639 S.F.	5611 S.F.		139,028 S.F.	
4	FEE	900 Tower Holdings, LLC	45,786 S.F.	2378 S.F.	2307 S.F.	43,048 S.F.	

PARCEL INFORMATION

PARCEL NUMBER	INTEREST ACQUIRED	OWNER	LARGER PARCEL	TAKE INCLUDING EXISTING EASEMENT	NET TAKE	REMAINDER	RECORDED DOCUMENT NUMBER
12	FEE	Randy G & Pamela J Button	82,161 S.F.	5445 S.F.	5445 S.F.	76,716 S.F.	
11	FEE	Anthony C Bentley	109,994 S.F.	8885 S.F.	8885 S.F.	101,109 S.F.	
10	FEE	Diep Nguyen-McGee	191,968 S.F.	21,932 S.F.	21,932 S.F.	170,036 S.F.	
9	FEE	Knikatnu Inc	103,585 S.F.	5074 S.F.	5074 S.F.	98,511 S.F.	

PALMER RECORDING DISTRICT

DATE	REVISIONS	BY
4-09-26	Updated Slopes & Parcels 5-9 & 12	MH

STATE OF ALASKA
DEPARTMENT OF TRANSPORTATION AND PUBLIC FACILITIES

RIGHT-OF-WAY MAP
ALASKA PROJECT

CFHWY00799 / 0001729

HERMON ROAD EXTENSION AND UPGRADE:
PARKS HWY TO PALMER-WASILLA HWY

DRAWN	MLH	DATE	4/09/2026	SCALE	1"=50'
CHECKED	JWV/KMG	DATE		SHEET	5 OF 11

DRAFT 4/9/2026

PROJECT DESIGNATION	SHEET NUMBER	TOTAL SHEETS
CFHWY00799/0001729	R6	R11

CONSULTANT RIGHT-OF-WAY SURVEYOR'S CERTIFICATE

MAPS PREPARED BY:
LOUNSBURY & ASSOCIATES, INC.
3230 C STREET, SUITE 201,
ANCHORAGE, ALASKA 99503
(907) 272-5451
CERT. OF AUTH. NO. AECC391

STA: 17+29.00
MATCHLINE SHEET 5

E 1/16 LINE
S 00°41'10" E 654.25'
C-E 1/16 CORNER
1240.80'
N 89°30'50" E
T17N R1W
S. M.
SEC. 11 & 12
DEED (2006-009974)
S1/2 SE1/4 NE1/4 SECTION 11
SW COR LOT 1 EDLUND SUBD
S 01°00'58" E 322.14'
S 89°13'53" W 1263.85'
260.10'
CHRIS SUBD.
(99-23)
4
20' MTA ESMT (BK1146 P377)
15' UTIL ESMT
206.77'
S 58°09'22" W 244.40'
S ADELE CIR
EDLUND SUBD.
(W-69)
TRACT 1A
S 89°37'58" W 440.94'
30+47.10 78.07' LT
N 00°46'04" W 220.00'
32+65.98 84.40' LT
N 13°22'26" W 61.40'
33+25.06 100.00' LT
S 12°21'10" W 164.75'
34+86.83 68.80' LT
RIGHT-OF-WAY LINE
N 00°46'04" W 205.00'
N 00°46'04" W 255.00'
39+61.48 87.09' LT
N 26°39'41" W 193.27'
41+31.97 178.11' LT
41+84.74 188.83' LT
N 39°01'22" E 110.00'
42+73.07 123.27' LT
43+67.51 95.23' LT
N 17°58'26" E 98.52'
R=206.93' L=198.06'
20.00'
30' UTIL ESMT
SLOPE LIMITS
75.00'
51.00'
43.51'
68.35'
1/4 COR
N 00°46'04" W 1321.48' 1/4 TO N 1/16 COR
PROJECT CENTERLINE
S HERMON ROAD
33' RIGHT OF WAY ESMT (BK126 P220)
660.74'
35+00
SECTION 11
SECTION 12
592.40'
355.07'
237.33'
S-N 1/64 COR
N 01°26'17" E 1833.28' (PT TO PC)
40+00
N 1/16 COR
99.96'
N 00°46'04" W 155.00'
30+89.78 55.96' RT
32+45.20 51.39' RT
S 37°42'24" W 98.76'
R=40.00' L=62.79'
30+50.58 96.85' RT
33+25.06 110.00' RT
33+25.06 PT
36+54.94 43.26' RT
R=20.00' L=34.67'
36+78.89 62.12' RT
N 10°00'00" W 336.57'
S 89°18'42" W 42.74'
36+80.48 104.83' RT
37+40.01 55.45' RT
R=20.00' L=32.74'
37+19.44 76.19' RT
N 89°18'42" E 27.17'
37+20.45 103.34' RT
S 00°41'18" E 33.00'
N 00°41'18" W 7.00'
130.00'
105.00'
206.83'
101.83'
N 89°15'33" E
N 03°05'57" E 327.56'
DEED (2013-009828)
40+67.43 64.95' RT
159.12'
85.00'
DEED (2016-026011)
SEE DETAIL-6A
S 88°42'30" W 74.12'
17
133.01'
S 00°48'44" E
91.00'
48.00'
18
DEED (2024-019851)
40+71.30 166.71' RT
N 00°33'39" W 106.26'
41+77.49 163.00' RT
RIGHT-OF-WAY LINE
N 88°46'25" E 43.00'
N 00°33'40" W 200.00'
197.86'
SEE DETAIL-7E
41+79.49 205.95' RT
20' GAS ESMT (BK602 P835)
40' PRIVATE ACCESS ESMT (BK76 P139)
S 89°29'24" W 414.91'
PROJECT C/L
PI=30+23.45
Δ=1°59'11"
R=17400.00'
L=603.27'
T=301.66'
WAIVER RESOLUTION NO. 76-57
(79-294W)
PARCEL 2
S1/2 SW1/4 NW1/4 SECTION 12
N 89°18'42" E 1319.08'
S-N 1/64 COR TO C-S-NW 1/64 COR
E ZAK CIR
33' ROW ESMT (BK426 P2)
1189.08'
N 89°18'42" E 538.71'
N 89°17'47" E 1218.36'
NOTE:
SEE SHEET 8 FOR DETAILS.
S 01°01'05" E 658.49'
C-S-NW 1/64 CORNER
W 1/16 LINE
C-W 1/16 CORNER
N 3°38'14" W 0.94' FROM REBAR
S 00°42'06" E 660.39'
STA: 43+70.79
MATCHLINE SHEET 7

NOTE:
STATIONS AND OFFSETS SHOWN HEREIN ARE TO COMPUTED RIGHT OF WAY LOCATIONS.
SEE MONUMENT SUMMARY SHEETS FOR POSITIONS OF RECOVERED CORNER MONUMENTS.

0 25 50 100
SCALE IN FEET

PALMER RECORDING DISTRICT

4-09-26	Updated Slopes & Parcels 13 & 15	MH
DATE	REVISIONS	BY

STATE OF ALASKA
DEPARTMENT OF TRANSPORTATION AND PUBLIC FACILITIES
RIGHT-OF-WAY MAP
ALASKA PROJECT
CFHWY00799 / 0001729
HERMON ROAD EXTENSION AND UPGRADE:
PARKS HWY TO PALMER-WASILLA HWY

DRAWN	MLH	DATE	4/09/2026	SCALE	1"=50'
CHECKED	JWV/KMG	DATE		SHEET	6 OF 11

PARCEL INFORMATION

PARCEL NUMBER	INTEREST ACQUIRED	OWNER	LARGER PARCEL	TAKE INCLUDING EXISTING EASEMENT	NET TAKE	REMAINDER	RECORDED DOCUMENT NUMBER
16	FEE	AK Frontier Rentals, LLC	368,294 S.F.	33,466 S.F.	33,466 S.F.	334,828 S.F.	
15	FEE	Andrew J Dalziel	871,088 S.F.	56,368 S.F.	31,363 S.F.	814,720 S.F.	
14	FEE	K2 Investments, LLC	132,354 S.F	37,219 S.F.	37,219 S.F.	95,135 S.F.	
13	FEE	Wasilla Land Trust, LLC	864,817 S.F.	43,813 S.F.	43,813 S.F.	821,004 S.F.	

PARCEL INFORMATION

PARCEL NUMBER	INTEREST ACQUIRED	OWNER	LARGER PARCEL	TAKE INCLUDING EXISTING EASEMENT	NET TAKE	REMAINDER	RECORDED DOCUMENT NUMBER
19	FEE	Bru-Nette, LLC	30,775 S.F.	30,775 S.F.	26,420 S.F.	0 S.F.	
18	FEE	AK Frontier Rentals, LLC	28,367 S.F.	28,367 S.F.	28,367 S.F.	0 S.F.	
17	FEE	John D. & Amie L. Sommer	42,971 S.F.	42,791 S.F.	42,791 S.F.	0 S.F.	

DRAFT 4/9/2026

PROJECT DESIGNATION	SHEET NUMBER	TOTAL SHEETS
CFHWY00799/0001729	R7	R11

SEE DETAIL-7B

SW COR UNIT 3

S. M. SEC. 11 & 12 T17N, R1W

S 89°37'58" W 793.91'
N 1/16 COR TO SW COR UNIT 3

CONSERVATION ESMT (2010-019771)

COMMON ELEMENT

GUARDIAN VIEW PLAZA
(2019-7)
(2005-011192)

UNIT 4

UNIT 1

UNIT 5

898.23'

ROW ESMT (BK9 P52)

R.O.W. PER BK230 P493

E PALMER-WASILLA HIGHWAY

20 T&E ESMT (2022-005388)

15' UTIL ESMT

MILLHOUSE ESTATES
(2023-75)
TRACT A

15' SCREENING ESMT

MC

E MYRTLE AVE

S 89°18'37" W 553.48'

30'

51+46.25
266.08' LT

PROJECT C/L
PI=52+18.73
Δ=27°09'36"
R=250.00'
L=118.51'
T=60.39'

N 00°45'56" W 549.74'
542.67'

S 77°34'56" W
69.52'

46+20.63
177.72' LT

43+65.22
168.16' LT

N 00°42'20" W 255.59'

CLAIM OF PRESCRIPTIVE ESMT

20' MEA ESMT (2020-016085)

SEE DETAIL-7A

L=102.19'
R=180.00'

N 24°26'44" W 138.06'
N 14°27'57" W 217.55'
N 24°26'44" W 139.02'

N 1/16 COR

L=65.29'
R=115.00'

40' PRIVATE ACCESS ESMT (BK805 P890)

S 78°13'38" E 95.30'

45+00

N 01°26'17" E 1833.28' (PT TO PC)

PROJECT CENTERLINE

50+00

SEE DETAIL-6A

SEE DETAIL-7E

SEE DETAIL-7D

N 19°00'00" W 138.18'

L=201.06' R=320.00'

40' ROW ESMT (BK106 P866)

N 17°00'00" E 133.66'

L=175.93' R=280.00'

46+33.89
123.94' LT

N 19°00'00" W 142.79'

N 17°00'00" E 133.66'

L=103.65' R=145.00'

L=132.24' R=185.00'

S 66°02'39" W 10.00'

N 66°02'39" E 81.41'

7.07'

N 86°20'56" E 200.00'

40.00'

S 64°16'41" W 250.38'

N 64°16'41" E 315.21' (PT TO PC)

60'

R=20.00'
L=22.71'

10' UTIL ESMT (2018-023396)

15' UTIL ESMT

52+64.72
68.88' LT

L=69.41'
R=294.79'

10' MEA ESMT (BK106 P866)

RIGHT-OF-WAY LINE

SECTION 11
SECTION 12

DEED (BK166 P51)

N 00°46'04" W 1321.48' N 1/16 TO SEC COR

577.99'

5.02'

N 00°46'04" W 260.84'

375.74'

75.86'

SEE NOTE 9, SHEET 9, FOR COR INFO

SECTION CORNER

N BETTS ST

N 00°46'04" W 264.17'

30'

46+55.55
62.78' LT

N 78°56'56" E 206.28'

141.40'

SLOPE LIMITS

PARCEL II

21

N 25°43'19" W 64.55'

L=50.38'
R=294.79'

N 62°15'56" E 51.58'

52+76.85 PT

S 05°27'01" E 530.47'

R=20.00'
L=40.13'

20

18

169.97'

51.08'

N 78°03'48" W 118.89'

44+01.03
82.08' RT

301.92'

N 00°45'30" W

RIGHT-OF-WAY LINE

601.95'

N 00°45'30" W 609.73'

51+58.34 PC

SLOPE LIMITS

ROW ESMT (BK9 P52)

7.78'

52+72.36
81.39' RT

END OF PROJECT
STA: 53+41.40

50' ROW ESMT (BK9 P52)

N 64°16'41" E 383.90'

15' UTIL ESMT

15' x 186' UTIL ESMT

BMB SUBD.
(95-107)
BLOCK 1
1A

R.O.W. PER BK230 P493

DEED (BK62 P515)

(97-3 ROS)

40' PRIVATE ACCESS ESMT (BK62 P515)

S 89°29'24" W 414.91'

N 89°19'37" E 1319.84'
N 1/16 TO NW 1/16 COR

N 89°07'53" E 530.82'

DEED (BK166 P51)

PARCEL I

DEED (2013-009573)

NOTE:
SEE SHEET 8 FOR DETAILS.

N 00°46'07" W 333.01'

NW 1/16 COR

SEE DETAIL-7C

STA: 43+70.79
MATCHLINE SHEET 6

NOTE:
STATIONS AND OFFSETS SHOWN HEREIN ARE TO COMPUTED RIGHT OF WAY LOCATIONS.
SEE MONUMENT SUMMARY SHEETS FOR POSITIONS OF RECOVERED CORNER MONUMENTS.

0 25 50 100
SCALE IN FEET

PALMER RECORDING DISTRICT

PARCEL NUMBER	INTEREST ACQUIRED	OWNER	LARGER PARCEL	TAKE INCLUDING EXISTING EASEMENT	NET TAKE	REMAINDER	RECORDED DOCUMENT NUMBER
21	FEE	Eric G & Jill E Follett	185,305 S.F.	81,719 S.F.	79,580 S.F.	103,586 S.F.	
20	FEE	Joyce Loitz	218,568 S.F.	44,405 S.F.	41,312 S.F.	174,163 S.F.	

PARCEL INFORMATION

DATE	REVISIONS	BY

CONSULTANT RIGHT-OF-WAY SURVEYOR'S CERTIFICATE

MAPS PREPARED BY:
LOUNSBURY & ASSOCIATES, INC.
3230 C STREET, SUITE 201,
ANCHORAGE, ALASKA 99503
(907) 272-5451
CERT. OF AUTH. NO. AECC391

STATE OF ALASKA
DEPARTMENT OF TRANSPORTATION AND PUBLIC FACILITIES

RIGHT-OF-WAY MAP
ALASKA PROJECT

CFHWY00799 / 0001729

HERMON ROAD EXTENSION AND UPGRADE:
PARKS HWY TO PALMER-WASILLA HWY

DRAWN	MLH	DATE	4/09/2026	SCALE	1"=50'
CHECKED	JWV/KMG	DATE		SHEET	7 OF 11

DETAIL SHEET

DRAFT 4/9/2026

PROJECT DESIGNATION	SHEET NUMBER	TOTAL SHEETS
CFHWY00799/0001729	R8	R11

DETAIL–4A
1"=5'

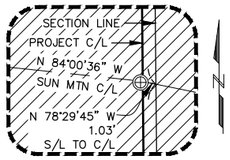

DETAIL–4D
1"=10'

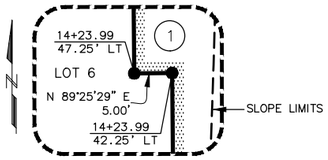

DETAIL–4B
1"=10'

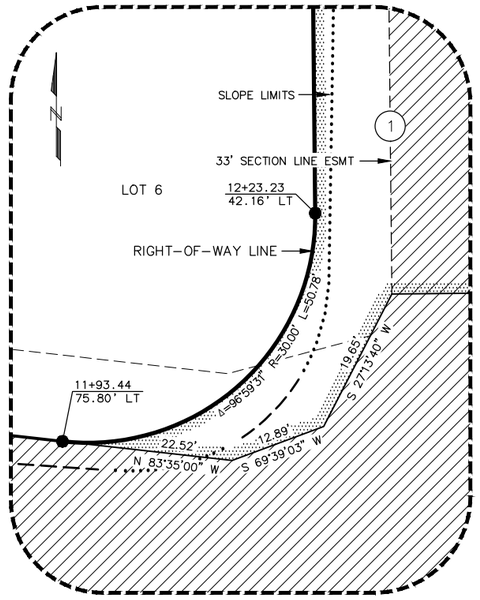

DETAIL–4C
1"=10'

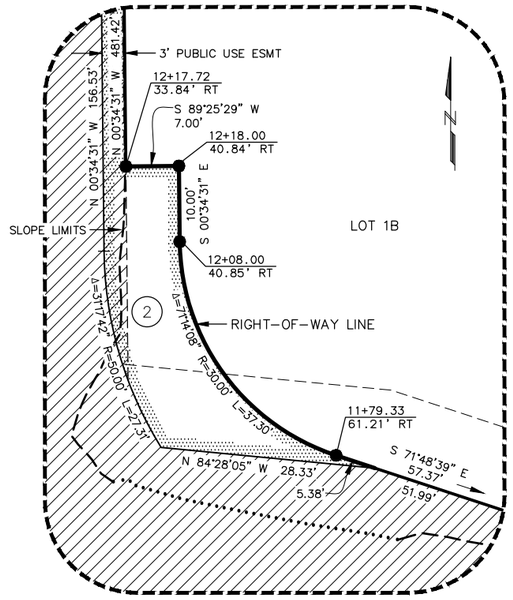

STATE OF ALASKA
TH
MARSHALL L HETLET
LS-9108
REGISTERED PROFESSIONAL LAND SURVEYOR

CONSULTANT RIGHT–OF–WAY SURVEYOR'S CERTIFICATE

MAPS PREPARED BY:
LOUNSBURY & ASSOCIATES, INC.
3230 C STREET, SUITE 201,
ANCHORAGE, ALASKA 99503
(907) 272–5451
CERT. OF AUTH. NO. AECC391

DETAIL–4E
1"=1'

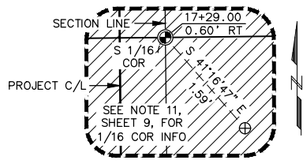

DETAIL–4F
1"=20'

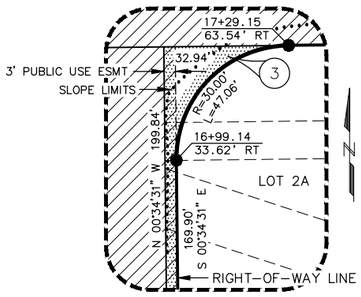

DETAIL–5C
1"=20'

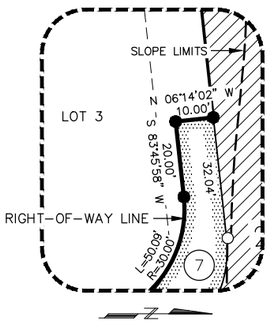

DETAIL–5A
1"=10'

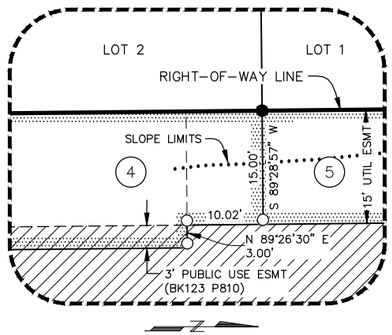

DETAIL–5B
1"=20'

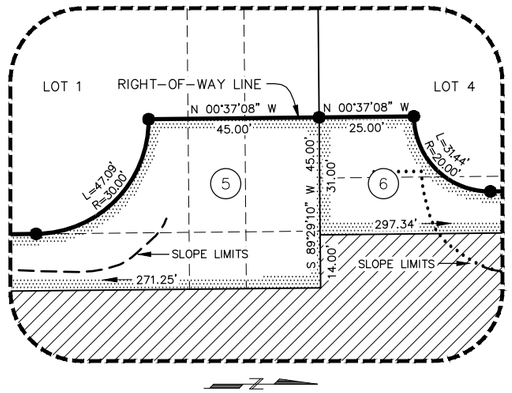

DETAIL–6A
1"=20'

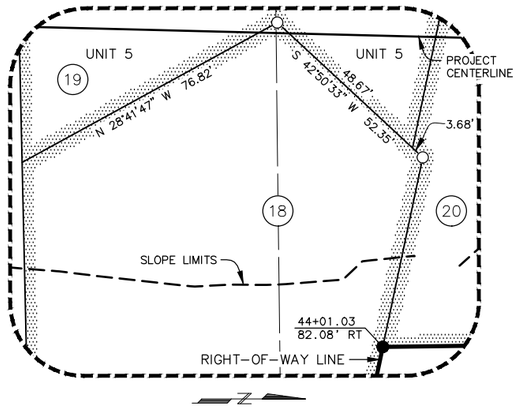

DETAIL–7A
1"=20'

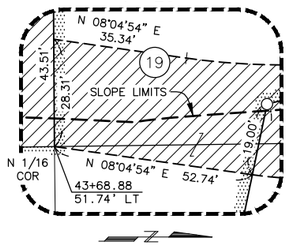

DETAIL–7B
NOT TO SCALE

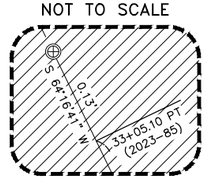

DETAIL–7C
NOT TO SCALE

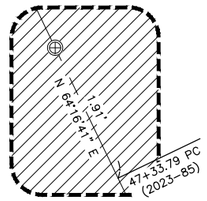

DETAIL–7D
1"=10'

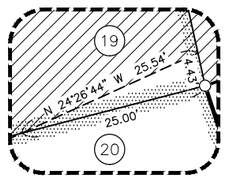

DETAIL–7E
1"=5'

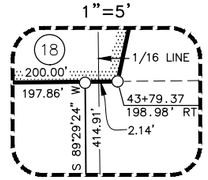

PALMER RECORDING DISTRICT

DATE	REVISIONS	BY

STATE OF ALASKA
DEPARTMENT OF TRANSPORTATION AND PUBLIC FACILITIES
RIGHT–OF–WAY MAP
ALASKA PROJECT

CFHWY00799 / 0001729

HERMON ROAD EXTENSION AND UPGRADE:
PARKS HWY TO PALMER–WASILLA HWY

DRAWN	MLH	DATE	4/09/2026	SCALE	VARIES
CHECKED	JWV/KMG	DATE		SHEET	8 OF 11

NOTES SHEET

DRAFT 4/9/2026

PROJECT DESIGNATION	SHEET NUMBER	TOTAL SHEETS
CFHWY00799/0001729	R9	R11

HORIZONTAL CONTROL STATEMENT

COORDINATE SYSTEM:

THIS PROJECT IS LOCATED ENTIRELY WITHIN THE MATANUSKA–SUSITNA VALLEY SV–1 ADJUSTMENT, A U.S. FOOT LOCAL SURFACE GRID COORDINATE SYSTEM DEVELOPED BY THE ALASKA DEPARTMENT OF TRANSPORTATION.

BASIS OF COORDINATES:

THE BASIS OF COORDINATES IS GPS PALM, A CONTINUOUSLY OPERATING REFERENCE STATION (CORS) MOUNTED ON THE DOT/PF MAINTENANCE BUILDING IN PALMER, ALASKA. SAID STATION HAS SV–1 COORDINATES OF 147896.4806 N, 481573.6333 E.

LOUNSBURY HELD THE RECORD VALUES FOR POINTS 2, 3, 5, 8 & 701 FROM THE SURVEY CONTROL DIAGRAM OF HHE–0441(8) AKSAS 51829: HSIP PALMER–WASILLA HIGHWAY, CENTER LEFT TURN LANE WIDENING, DATED APRIL 29, 2014, RECORDED UNDER P.R.D. PLAT NO. 2014–45, FIXED AT THEIR PUBLISHED COORDINATES.

BASIS OF BEARINGS:

THE BASIS OF BEARINGS IS A LOCAL GRID BEARING BETWEEN GPS PALM AND GPS MSB–1, AN NGS BRASS CAP LOCATED EAST OF THE MATANUSKA–SUSITNA BOROUGH BUILDING. THE LOCAL GRID BEARING BETWEEN GPS PALM AND GPS MSB–1 IS N 20° 36' 42 E AT A DISTANCE OF 5405.86 U.S. FEET. GPS MSB–1 HAS SV–1 COORDINATES OF 152956.3007 N, 483476.6610 E.

TRANSLATION PARAMETERS:

TO CONVERT THE LOCAL COORDINATES TO NAD83 (92) STATE PLANE U.S. FOOT COORDINATES, TRANSLATE USING +2624946.5706 FEET N, +1312508.8943 FEET E, AND SCALE USING 0.9998990458.

GENERAL NOTES

1. THE RIGHT–OF–WAY SURVEY WAS PERFORMED BY LOUNSBURY AND ASSOCIATES, INC. JUNE THROUGH JULY 2022.
2. THE RIGHT–OF–WAY MAPPING WAS PREPARED BY LOUNSBURY AND ASSOCIATES, INC. STARTING IN JULY 2022.
3. ALL DISTANCES SHOWN ARE GROUND DISTANCES IN U.S. SURVEY FEET.
4. THESE PLANS MAY BE USED FOR THE ESTABLISHMENT OF RIGHT–OF–WAY LIMITS ONLY. THESE DRAWINGS SHOULD NOT BE USED AS A BASIS FOR ESTABLISHING ADJOINING PROPERTY LINES AND CORNERS. SURVEY DATA, INCLUDING MONUMENTATION AND TOPOGRAPHIC FEATURES, WAS ACQUIRED BY LOUNSBURY AND ASSOCIATES, INC. THROUGH JULY 2025.
5. WHETHER LISTED OR NOT, UNLESS OTHERWISE NOTED, ALL MONUMENTS OR PROPERTY MARKERS/CORNERS OR ACCESSORIES WHICH WILL BE DISTURBED OR BURIED SHALL BE REFERENCED AND RE–ESTABLISHED IN THEIR ORIGINAL POSITION (A.S. 19.10.260) AND RECORDED (A.S. 34.65.040).
6. ALL DOCUMENTS NOTED IN THIS PLAN SET AND REFERENCED BY INSTRUMENT NUMBER OR BOOK AND PAGE ARE RECORDED IN THE PALMER RECORDING DISTRICT (P.R.D.) UNLESS OTHERWISE NOTED.
7. TITLE REPORTS WERE OBTAINED FOR PROPERTIES ALONG HERMON ROAD WHERE ACQUISITION IS REQUIRED. A CONCERTED EFFORT HAS BEEN MADE TO SHOW PERTINENT TITLE INTERESTS FOR ADJOINING PROPERTIES; HOWEVER, SOME EASEMENTS MAY EXIST THAT ARE NOT SHOWN THIS RIGHT–OF–WAY MAP.
8. FOR ADDITIONAL SURVEY CONTROL INFORMATION, REFER TO THE SURVEY CONTROL DIAGRAM RECORD OF SURVEY PREPARED BY LOUNSBURY AND ASSOCIATES, INC. AND RECORDED AS PLAT NO. 2023–12 IN THE PALMER RECORDING DISTRICT.
9. AT THE CORNER OF SECTIONS 1, 2, 11, AND 12, T17N, R1W, A SECOND BLM BRASS CAP CORNER BEARS N 28°35'30" E 0.21'' AND IS STAMPED GENERAL LAND OFFICE. A BLM ALUMINUM CAP MONUMENT WAS SET IN 1985, BUT NO RECORD WAS FOUND OF IT BEING SET IN BLM RECORDS. THEORY IS THAT THIS CORNER WAS UPGRADED IN 1985 DURING THE BLM RAILROAD SURVEY, US SURVEY 9029, AND THE ORIGINAL CORNER BURIED NEXT TO THE NEW ALUMINUM CAP. FOR ADDITIONAL INFORMATION REGARDING THE SECTION CORNER, SEE PLAT NO. 2014–121.
10. THE POSITION OF SE 1/16 CORNER OF SECTION 11 IS BASED ON THE RECOVERED CENTERLINE MONUMENTS FOR EAST SUN MOUNTAIN AVENUE AND THE PARKS HIGHWAY RIGHT–OF–WAY MAPS, RECORDED AS PLAT NO. 2010–53. THE FIELD CREW DETECTED A FAINT SIGNAL AT THE RECORD POSITION, INDICATING THAT THE MONUMENT HAS BEEN BURIED AND PAVED OVER.
11. THE BRASS CAP MONUMENT FOUND NEAR THE S 1/16 CORNER OF SECTIONS 11 AND 12 IS NOT AT THE S 1/16 CORNER POSITION AS SHOWN ON PLATS 78–1, 78–144, AND 86–76.
12. THE LOCATION OF THE 40' ROW ESMT RECORDED IN BOOK 106 PAGE 866 WAS BASED ON A BEST FIT LOCATION OF THE EXISTING ROAD FOR N. TRENT CIRCLE.

EXISTING RIGHT OF WAY – SOURCE DOCUMENTS

SHEET	DOCUMENT
4	PLAT 76–46, PLAT 78–1, PLAT 78–144, PLAT 84–61, PLAT 86–76, PLAT 2004–190, PLAT 2005–32, PLAT 2010–53
5	PLAT 76–88, PLAT 83–255, PLAT 85–6, PLAT 2007–140, PLAT 2011–102, PLAT 2014–49, PLAT 2019–26, PLAT 2021–3, PUE BK123 P810
6	PLAT W–69, PLAT 99–23, ROW ESMT BK126 P220, ROW ESMT BK426 P2
7	PLAT 86–154, PLAT 95–107, PLAT 2014–121, PLAT 2019–7, ROW ESMT BK106 P866

STATE OF ALASKA
MARSHALL L. HETLET
LS–9108
REGISTERED PROFESSIONAL LAND SURVEYOR

CONSULTANT RIGHT–OF–WAY SURVEYOR'S CERTIFICATE

MAPS PREPARED BY:
LOUNSBURY & ASSOCIATES, INC.
3230 C STREET, SUITE 201,
ANCHORAGE, ALASKA 99503
(907) 272–5451
CERT. OF AUTH. NO. AECC391

PALMER RECORDING DISTRICT

DATE	REVISIONS	BY

STATE OF ALASKA
DEPARTMENT OF TRANSPORTATION AND PUBLIC FACILITIES
RIGHT–OF–WAY MAP
ALASKA PROJECT
CFHWY00799 / 0001729
HERMON ROAD EXTENSION AND UPGRADE:
PARKS HWY TO PALMER–WASILLA HWY

DRAWN	MLH	DATE	4/09/2026	SCALE	N/A
CHECKED	JWV/KMG	DATE		SHEET	9 OF 11

MONUMENT SUMMARY SHEET

DRAFT 4/9/2026

PROJECT DESIGNATION	SHEET NUMBER	TOTAL SHEETS
CFHWY00799/0001729	R10	R11

RECOVERED CORNERS - SHEET 4

MONUMENT TYPE : LOCATION	NORTHING	EASTING	STATION	OFFSET
Fd BC[GLO]: S11|S12/S14|S13 *T17N R1W SM	141808.6746	434387.7350		
Fd AC/Bx: POL 2+500.000	142357.4065	435998.6330		
Fd AC/Bx: PC 2+870.434	142482.0150	434789.7107	10+79.01	409.62 RT
Fd Rbr/AC[9689]: SW L1A Sun Plaza	142498.6627	435024.3097	10+93.41	644.37 RT
Fd AC/Bx: PT 2+919.460	142506.3648	434630.7909	11+04.88	250.94 RT
Fd Rbr/AC[9689]: SE L3C-1 B3 Mountain Village Plaza	142513.7040	434874.2731	11+09.88	494.48 RT
Fd Rbr/PC[8535]: SW L3C-1 B3 Mountain Village Plaza	142528.2818	434731.5171	11+25.83	351.87 RT
Fd AM[8535]: SE L1B B3 Mountain Village Plaza	142534.2449	434671.7086	11+32.36	292.12 RT
Fd Rbr: SW L3C-1 B3 Mountain Village Plaza	142540.9092	434721.6215	11+38.55	342.10 RT
Fd Rbr: SW L1A Sun Plaza	142547.7706	434979.5195	11+42.94	600.05 RT
Fd AC/Bx: PI 3+000.000	142557.4573	434379.2050	11+58.37	0.14 LT
Fd Rbr/AC: SE L3C-1 B3 Mountain Village Plaza	142564.2042	434929.2177	11+59.86	549.91 RT
Fd AC/Bx: PCC 3+108.088	142614.7848	434022.2477	12+19.12	356.54 LT
Fd Nail/Washer: NW L3C-1 B3 Mountain Village Plaza	142713.0515	434719.6165	13+10.70	341.74 RT
Fd Rbr/PC: NE L3C-1 B3 Mountain Village Plaza	142714.6905	434869.6276	13+10.91	491.76 RT
Fd Rbr/PC[8535]: W L3C-1 B3 Mountain Village Plaza	142742.3613	434669.2969	13+40.49	291.70 RT
Fd Rbr/PC[8535]: NE L3C-1 B3 Mountain Village Plaza	142745.4407	434931.3546	13+41.06	553.78 RT
Fd Rbr: NE L3C-1 B3 Mountain Village Plaza	142744.8506	434869.3277	13+41.07	491.75 RT
Fd Rbr/PC[8535]: E L3C-1 B3 Mountain Village Plaza	142837.5146	434975.8944	14+32.71	599.20 RT
Fd Rbr/PC: NW L1C B3 Mountain Village Plaza	142928.6009	434406.9436	15+29.24	31.15 RT
Fd AM[8535]: NW L3C-1 B3 Mountain Village Plaza	142969.4397	434666.5975	15+67.59	291.18 RT
Fd Rbr/PC[10609]: SE L2 900 Tower Road	143126.5309	434343.8536	17+27.76	30.05 LT
Fd BC: NE L6 B1 Overlook Business Park	143126.8661	434375.5411	17+27.79	1.64 RT
Fd AM[11299]: NW L6 B1 Overlook Business Park	143126.2109	434303.1123	17+27.83	70.79 LT
Fd AC/Bx: PT 3+452.152	143120.4758	433018.6963	17+34.39	1355.20 LT
Fd BC[1634]: CS 1/16 S12 *T17N R1W SM	143159.7568	437011.9578	17+35.44	2638.25 RT

RECOVERED CORNERS - SHEET 5

MONUMENT TYPE : LOCATION	NORTHING	EASTING	STATION	OFFSET
Fd Rbr: SW L6 B1 Whispering Woods	143178.4788	434427.1909	17+78.91	53.78 RT
Fd Rbr: SE L6 B1 Whispering Woods	143182.8562	434805.7415	17+79.66	432.36 RT
Fd Rbr: SW L6 B1 Whispering Woods	143198.3171	434406.6085	17+98.94	33.39 RT
Fd Rbr/PC[10609]: NE L2 900 Tower Road	143271.4793	434339.4500	18+72.74	33.06 LT
Fd Rbr/PC: NE L2 900 Tower Road	143271.5285	434342.4638	18+72.76	30.05 LT
Fd Rbr/PC: NE L2 900 Tower Road	143281.5130	434339.3528	18+82.78	33.06 LT
Fd Rbr/PC[9020]: W L1 900 Tower Road	143277.4813	433892.8797	18+83.02	479.55 LT
Fd Rbr: NE L6 B1 Whispering Woods	143441.3550	434806.8865	20+38.14	435.98 RT
Fd Rbr: NW L6 B1 Whispering Woods	143438.0900	434404.4829	20+38.73	33.56 RT
Fd Rbr/PC[9020]: NW L4 Sun Mountain	143846.2902	433888.1016	24+51.85	478.89 LT
Fd Rbr: NE L7 B1 Whispering Woods	143921.5733	434799.5283	25+18.40	433.22 RT
Fd Rbr/PC[9020]: NW L3 Sun Mountain	144163.8566	434077.5360	27+66.85	286.48 LT
Fd Rbr: NE L3 Sun Mountain	144183.5716	434316.6943	27+84.84	47.20 LT
Fd Rbr: SW L9 B1 Whispering Woods	144193.0253	434396.9434	27+93.84	33.10 RT
Fd Rbr: SE L9 B1 Whispering Woods	144196.4571	434796.9315	27+95.13	433.10 RT
Fd Rbr/PC[9020]: NW L3 Sun Mountain	144193.4137	434076.9289	27+95.93	286.91 LT
Fd Rbr: NW L3 Sun Mountain	144193.9735	434110.4793	27+96.30	253.35 LT
Fd Rbr/AC[8535]: NE L3 Sun Mountain	144213.0338	434283.6312	28+14.36	80.11 LT
Fd Rbr: SW L5 B3 Maney Acres 2	144244.0677	434110.5801	28+45.68	253.06 LT
Fd Rbr: SE L5 B3 Maney Acres 2	144265.9115	434310.5515	28+66.97	53.05 LT
Fd Rbr: SE L5 B3 Maney Acres 2	144292.1922	434330.2057	28+93.17	33.38 LT
Fd Rbr: NW L9 B1 Whispering Woods	144398.1455	434414.7169	29+99.46	50.78 RT
Fd Rbr: NE L9 B1 Whispering Woods	144402.6643	434794.8603	30+06.58	430.88 RT
Fd AM[2071]: CE 1/16 S11 *T17N R1W SM	144436.2895	433045.4964	30+26.79	1318.68 LT
Fd Rbr: NW L5 B3 Maney Acres 2	144445.2173	434108.2449	30+43.92	256.05 LT
Fd Rbr: NE L5 B3 Maney Acres 2	144447.2838	434328.2752	30+47.95	36.04 LT
Fd BC[GLO]: 1/4 S11|S12 *T17N R1W SM	144447.4522	434361.2450	30+48.42	3.08 LT
Fd BC[7233]: C 1/4 S12 *T17N R1W SM	144479.8307	436997.6853	31+15.14	2632.84 RT

RECOVERED CORNERS - SHEET 6

MONUMENT TYPE : LOCATION	NORTHING	EASTING	STATION	OFFSET
Fd Rbr/PC[9106]: SW L1 B3 Utopia Meadows	144462.7077	435679.5245	30+78.04	1314.98 RT
Fd Rock Drill: SW L1 Edlund	145091.4306	433107.3057	36+60.69	1270.58 LT
Fd Rbr: SW L4 Chris	145103.4516	434041.3258	36+96.14	337.16 LT
Fd AM[2234]: S-N 1/64 S11|S12 *T17N R1W SM	145108.1211	434352.4575	37+08.62	26.24 LT
Fd IP: SE Deed 2013-009828	145119.8830	435020.9883	37+37.15	641.78 RT
Fd Rbr: NW L4 Chris	145426.0504	434035.6047	40+18.50	350.97 LT
Fd IP: Prop Cor	145463.1609	434346.7566	40+63.40	40.85 LT
Fd IP: SE Deed 2016-026011	145465.8460	434554.4469	40+71.30	166.71 RT
Fd Rbr: N L4 Chris	145545.6347	434228.1447	41+42.88	161.50 LT
Fd IP: NE Deed 2016-026011	145571.0707	434505.4177	41+75.26	115.05 RT
Fd Rbr/PC[2234]: NE L4 Chris	145700.3514	434344.4181	43+00.46	49.14 LT
Fd IP: NE Deed 2016-026011	145704.0650	434503.5320	43+08.17	109.83 RT
Fd Drill Bit: NW Tract 1A Edlund	145765.9520	433859.2925	43+53.87	535.76 LT
Fd Rbr/PC[9106]: SW Unit 5 Guardian View Plaza	145768.0585	434227.0639	43+65.20	168.16 LT
Fd Rock Drill: NE Tract 1A Edlund	145769.9419	434300.0167	43+68.92	95.28 LT
Fd IP: NE Angle Point Tax Parcel B24	145769.7756	434392.5471	43+71.07	2.77 LT
Fd Rbr/PC[9106]: NE Deed 2016-016236	145770.8662	434594.5328	43+77.23	199.12 RT
Fd Rbr/PC[9106]: NE Deed 2016-016236	145773.0087	434594.4384	43+79.37	198.98 RT

RECOVERED CORNERS - SHEET 7

MONUMENT TYPE : LOCATION	NORTHING	EASTING	STATION	OFFSET
Fd Rod: NE PC Tr A Millhouse Est	147039.9031	434296.4725		
Fd BC[GLO]: MC S2/S11 *T17N R1W SM	147083.5218	433772.3925		
Fd Rbr: S Line Tr A Millhouse Est	146652.4400	434063.2944		
Fd Rbr: SE PT Tr A Millhouse Est	146784.1084	434299.9530		
Fd Rbr: SE PC Tr A Millhouse Est	146761.1729	434288.4973		
Fd Rbr/PC/BX: NW L1A B1 BMB Subd	147090.5273	434355.8563		
Fd Rbr: SW PT L1A B1 BMB Subd	146826.7673	434359.2741		
Fd Rbr: SW PC L1A B1 BMB Subd	146808.9805	434387.9200		
Fd Rbr/AC[11547]: SE L1A B1 BMB	146981.7322	434708.5838		
Fd AM/BX[BLM]: S1|S2/S11|S12 *T17N R1W SM	147090.1841	434325.8305		
Fd Rbr/AC[11547]: SE L1A B1 BMB	146966.4374	434715.8369		
Fd Rbr: E Unit 5 Guardian View Plaza	145824.9070	434332.3512	44+24.67	64.33 LT
Fd IP: NW 1/16 S12 *T17N R1W SM	145784.5279	435662.0276	44+17.68	1265.94 RT
Fd Rbr/PC[9106]: NE Tax Parcel B24	145808.1629	434428.1471	44+10.34	31.86 RT
Fd Rbr/PC[9106]: NW Unit 5 Guardian View Plaza	146023.6304	434223.9165	46+20.61	177.72 LT
Fd Rbr/PC[9106]: SW Parcel 2 Bk166 P51	146008.6958	434156.0256	46+03.98	245.21 LT
Fd Rbr/PC[9106]: SE Angle Point East Line Sec 11 L A11	146035.5552	434278.0078	46+33.89	123.94 LT
Fd Rbr/PC[9106]: SE Unit 1 Guardian View Plaza	146143.9055	434154.1937	47+39.10	250.44 LT
Fd Rbr/PC[9106]: SW Parcel No. 1 Book 166 Page 52	146099.4925	434474.1252	47+02.73	70.51 RT
Fd BC/Bx[DOH]: PT 42+44.87	146324.5892	433521.5235	49+03.85	887.44 LT
Fd Rbr: SW R.L. Hardesty	146432.9163	434468.9100	50+35.92	56.93 RT
Fd Rbr: NE L1 Guardian View Plaza	146558.2517	434148.6556	51+53.18	266.37 LT
Fd Rbr: N Parcel 2 Bk 166 P51	146633.5855	434331.9572	52+64.69	68.88 LT
Fd Rbr: NW Sec. 12 L B004	146700.8645	434466.1660	52+71.99	81.08 RT
Fd BC/Bx[DOH]: PC 56+72.48	146943.8747	434807.0463	53+41.40	493.59 RT

STATE OF ALASKA
JOSHUA W. VARNEY
LS-106379
REGISTERED PROFESSIONAL LAND SURVEYOR

CONSULTANT LOCATIONS
SURVEYOR'S CERTIFICATE

MAPS PREPARED BY:
LOUNSBURY & ASSOCIATES, INC.
3230 C STREET, SUITE 201,
ANCHORAGE, ALASKA 99503
(907) 272-5451
CERT. OF AUTH. NO. AECC391

PALMER RECORDING DISTRICT

DATE	REVISIONS	BY

STATE OF ALASKA
DEPARTMENT OF TRANSPORTATION AND PUBLIC FACILITIES

RIGHT-OF-WAY MAP
ALASKA PROJECT

CFHWY00799 / 0001729

HERMON ROAD EXTENSION AND UPGRADE:
PARKS HWY TO PALMER-WASILLA HWY

DRAWN	MLH	DATE	4/9/2026	SCALE	N/A
CHECKED	JWV/KMG	DATE		SHEET	10 OF 11

MONUMENT SUMMARY SHEET

PROJECT DESIGNATION	SHEET NUMBER	TOTAL SHEETS
CFHWY00799/0001729	R11	R11

DRAFT 4/9/2026



CONSULTANT LOCATIONS SURVEYOR'S CERTIFICATE

MAPS PREPARED BY:
LOUNSBURY & ASSOCIATES, INC.
3230 C STREET, SUITE 201,
ANCHORAGE, ALASKA 99503
(907) 272-5451
CERT. OF AUTH. NO. AECC391

RIGHT OF WAY CORNERS SET THIS SURVEY — SHEET 4

MONUMENT TYPE : LOCATION	NORTHING	EASTING	STATION	OFFSET
Set Rbr/AC: S AP L1B B3 Mountain Village Plaza	142561.0846	434494.8627	11+60.89	115.54 RT
Set Rbr/AC: SE PC Parcel 2	142578.9945	434440.3547	11+79.33	61.21 RT
Set Rbr/AC: SW PT Parcel 1	142591.7957	434303.2178	11+93.44	75.80 LT
Set Rbr/AC: SE PT Parcel 2	142607.1942	434419.7209	12+07.72	40.85 RT
Set Rbr/AC: E AP Parcel 2	142617.1235	434412.6209	12+17.72	33.84 RT
Set Rbr/AC: E AP Parcel 2	142617.1937	434419.6205	12+17.72	40.84 RT
Set Rbr/AC: SW PC Parcel 1	142621.9089	434336.5690	12+23.23	42.16 LT
Set Rbr/AC: NE Parcel 2	142762.5072	434411.1614	13+63.11	33.77 RT
Set Rbr/AC: W AP Parcel 1	142822.6110	434329.5539	14+23.99	47.25 LT
Set Rbr/AC: W AP Parcel 1	142822.6612	434334.5537	14+23.99	42.25 LT
Set Rbr/AC: SE Parcel 3	142928.6296	434409.4937	15+29.24	33.70 RT
Set Rbr/AC: NE PC Parcel 3	143098.5207	434407.7882	16+99.14	33.62 RT
Set Rbr/AC: NW Parcel 1 - SW Parcel 4	143127.5956	434326.4923	17+28.99	47.40 LT
Set AM/Bx: S 1/16 S11|S12 *T17N R1W SM	143128.0634	434374.4900	17+29.00	0.60 RT
Set Rbr/AC: NE PT Parcel 3	143128.8197	434437.4263	17+29.15	63.54 RT

RIGHT OF WAY CORNERS SET THIS SURVEY — SHEET 5

MONUMENT TYPE : LOCATION	NORTHING	EASTING	STATION	OFFSET
Set Rbr/AC: SE Parcel 9	143179.2991	434477.0203	17+79.25	103.62 RT
Set Rbr/AC: SE AP Parcel 9	143206.8155	434423.7019	18+07.28	50.57 RT
Set Rbr/AC: NW Parcel 4 - SW Parcel 5	143281.3829	434324.9484	18+82.79	47.47 LT
Set Rbr/AC: NE Parcel 9 - SE Parcel 10	143438.2504	434421.3786	20+38.72	50.46 RT
Set Rbr/AC: NW PC Parcel 5	143477.6552	434322.9781	20+79.07	47.56 LT
Set Rbr/AC: NW PT Parcel 5	143507.3528	434292.7106	21+09.05	77.54 LT
Set Rbr/AC: NW Parcel 5 - SW Parcel 6	143552.3503	434292.2245	21+54.05	77.60 LT
Set Rbr/AC: SW PC Parcel 6	143577.3489	434291.9544	21+79.05	77.63 LT
Set Rbr/AC: SW PT Parcel 6	143597.5488	434311.7740	21+99.06	57.62 LT
Set Rbr/AC: E AP Parcel 10	143628.2684	434419.4711	22+28.75	50.37 RT
Set Rbr/AC: NW Parcel - SW Parcel 7	143849.8587	434309.2412	24+51.39	57.73 LT
Set Rbr/AC: NE parcel 10 - SE Parcel 11	143919.0350	434511.5569	25+18.62	145.24 RT
Set Rbr/AC: E AP Parcel 11	144006.8181	434415.6709	26+07.32	50.19 RT
Set Rbr/AC: PC Parcel 7	144171.9041	434306.0082	27+73.28	57.96 LT
Set Rbr/AC: NE Parcel 11 - SE Parcel 12	144193.1699	434413.8002	27+93.89	49.96 RT
Set Rbr/AC: E AP Parcel 15	144199.2538	434252.8703	28+00.80	110.94 LT
Set Rbr/AC: PT Parcel 7	144201.4256	434272.7521	28+02.86	91.05 LT
Set Rbr/AC:NW Parcel 7	144209.1947	434251.7845	28+10.68	111.98 LT
Set Rbr/AC: SW Parcel 8	144250.8415	434172.5920	28+52.23	191.03 LT
Set Rbr/AC: E AP Parcel 12	144260.5019	434413.1243	28+61.42	49.52 RT
Set Rbr/AC: AP Parcel 8	144260.7824	434171.5061	28+62.06	192.10 LT
Set Rbr/AC: PC Parcel 8	144270.5554	434260.9739	28+71.64	102.62 LT
Set Rbr/AC: PT Parcel 8	144300.6791	434287.7147	29+01.61	75.88 LT
Set Rbr/AC: E AP Parcel 12	144308.3470	434427.6447	29+09.41	64.05 RT
Set Rbr/AC: NE PC Parcel 12	144358.3444	434427.1428	29+59.59	63.41 RT
Set Rbr/AC: NE PT Parcel 12	144398.7429	434466.6496	30+00.40	102.70 RT
Set Rbr/AC: NW Parcel 8 - SW Parcel 13	144446.8159	434286.2477	30+47.10	78.07 LT

RIGHT OF WAY CORNERS SET THIS SURVEY — SHEET 6

MONUMENT TYPE : LOCATION	NORTHING	EASTING	STATION	OFFSET
Set Rbr/AC: SE PC Parcel 15	144448.6797	434461.1928	30+50.58	96.85 RT
Set Rbr/AC: SE PT Parcel 15	144488.1407	434420.7051	30+89.78	55.96 RT
Set Rbr/AC: E AP Parcel 15	144643.1268	434418.6282	32+45.20	51.39 RT
Set Rbr/AC: W AP Parcel 13	144666.7962	434283.2998	32+65.98	84.40 LT
Set Rbr/AC: E AP Parcel 15	144721.2610	434479.0316	33+25.06	110.00 RT
Set Rbr/AC: W AP Parcel 13	144726.5310	434269.0978	33+25.06	100.00 LT
Set Rbr/AC: W AP Parcel 13	144887.4707	434304.3439	34+86.83	68.80 LT
Set Rbr/AC: NE PC Parcel 15	145052.7144	434420.5875	36+54.94	43.26 RT
Set Rbr/AC: NE PT Parcel 15	145076.1859	434440.0433	36+78.89	62.12 RT
Set Rbr/AC: NE AP Parcel 15	145076.6993	434482.7784	36+80.48	104.83 RT
Set Rbr/AC: NW Parcel 13 - SW Parcel 14	145107.4510	434301.3960	37+06.67	77.27 LT
Set Rbr/AC: NE Parcel 15 - SE Parcel 16	145109.6969	434482.3820	37+13.46	103.60 RT
Set Rbr/AC: SE PC Parcel 16	145116.3700	434455.1260	37+19.44	76.19 RT
Set Rbr/AC: SE AP Parcel 16	145116.6964	434482.2979	37+20.45	103.34 RT
Set Rbr/AC: SE PT Parcel 16	145137.4498	434434.9150	37+40.01	55.45 RT
Set Rbr/AC: W AP Parcel 14	145362.4281	434297.9791	39+61.48	87.09 LT
Set Rbr/AC: NE Parcel 16	145464.5296	434452.6248	40+67.43	64.95 RT
Set Rbr/AC: NW AP Parcel 14	145535.1461	434211.2573	41+31.97	178.11 LT
Set Rbr/AC: W AP Parcel 17	145572.0980	434553.4067	41+77.49	163.00 RT
Set Rbr/AC: SE Parcel 18	145573.0183	434596.3969	41+79.49	205.95 RT

RIGHT OF WAY CORNERS SET THIS SURVEY — SHEET 7

MONUMENT TYPE : LOCATION	NORTHING	EASTING	STATION	OFFSET
Set Rbr/AC: SE Parcel 20	145797.5984	434478.1208	44+01.03	82.08 RT
Set Rbr/AC: SW Parcel 21	146055.6658	434339.6938	46+55.55	62.78 LT
Set Rbr/AC: NW Parcel 21	146551.3171	434148.7754	51+46.25	266.08 LT

PROJECT CENTERLINE MONUMENTS SET THIS SURVEY

SHEET NO.	MONUMENT TYPE	NORTHING	EASTING	STATION
4	PRIMARY CENTERLINE MON. IN CASE	142399.0913	434380.8654	10+00.00
5	PRIMARY CENTERLINE MON. IN CASE	144120.8041	434364.3836	27+21.79
6	PRIMARY CENTERLINE MON. IN CASE	144724.0215	434369.0663	33+25.06
7	PRIMARY CENTERLINE MON. IN CASE	146556.7287	434415.0729	51+58.34
7	PRIMARY CENTERLINE MON. IN CASE	146671.5033	434390.3795	52+76.85
7	PRIMARY CENTERLINE MON. IN CASE	146729.6550	434362.3656	53+41.40

PALMER RECORDING DISTRICT

DATE	REVISIONS	BY

STATE OF ALASKA
DEPARTMENT OF TRANSPORTATION AND PUBLIC FACILITIES
RIGHT-OF-WAY MAP
ALASKA PROJECT
CFHWY00799 / 0001729
HERMON ROAD EXTENSION AND UPGRADE:
PARKS HWY TO PALMER-WASILLA HWY

DRAWN MLH	DATE 4/09/2026	SCALE N/A	
CHECKED JWV/KMG	DATE	SHEET 11	OF 11